5 Tier Rotating Bookshelf Instruction Manual

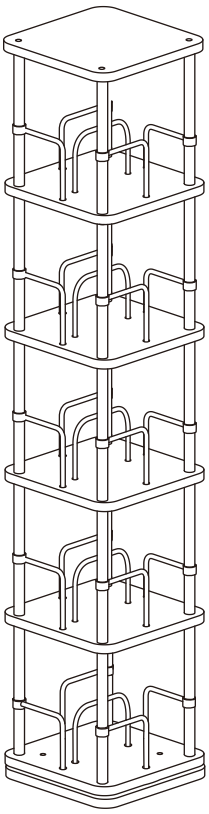

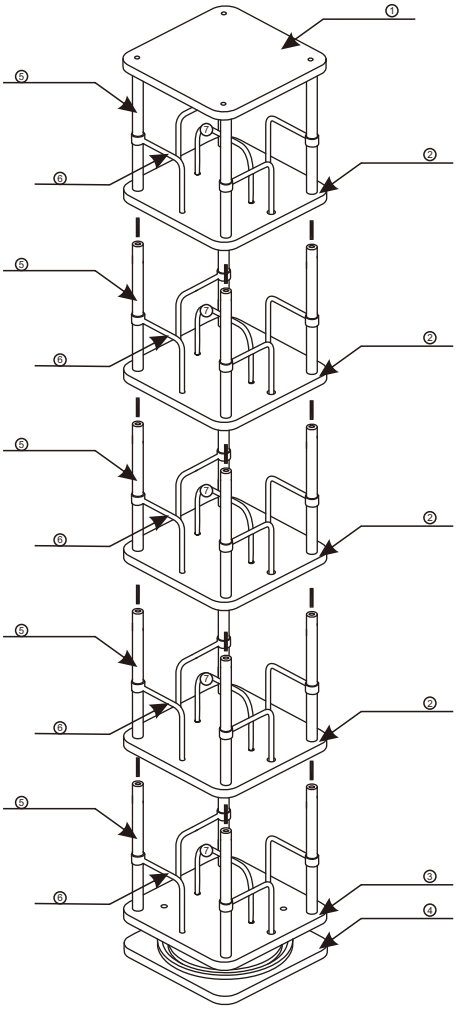

5 Tier Rotating Bookshelf

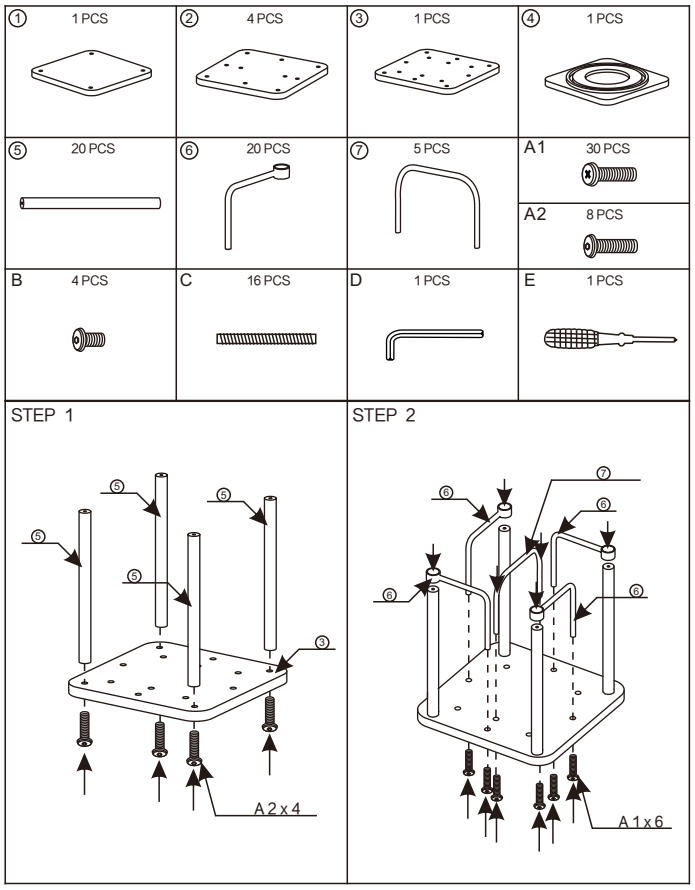

5 Tier Rotating Bookshelf

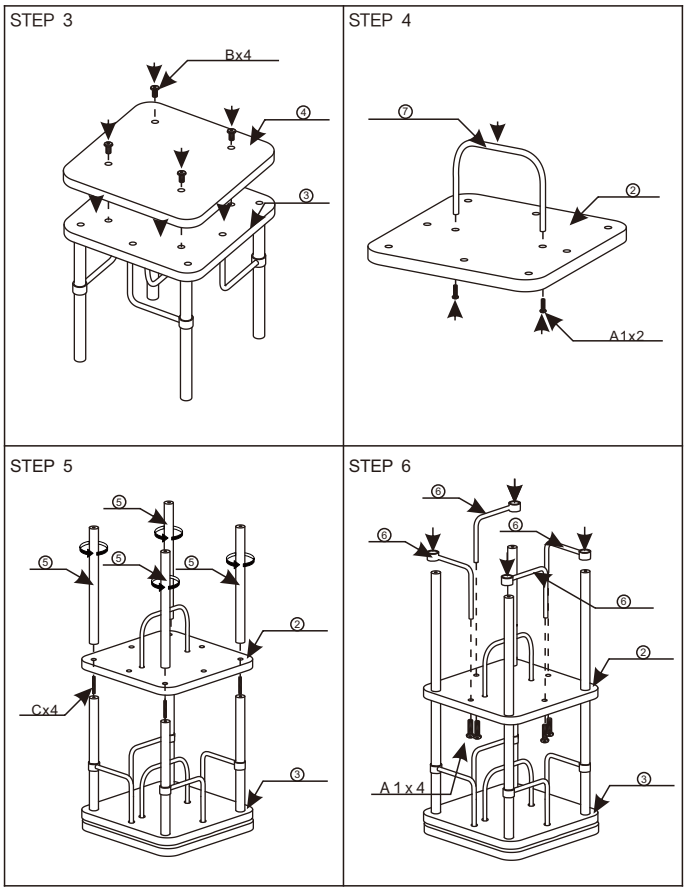

5 Tier Rotating Bookshelf

STEP 7

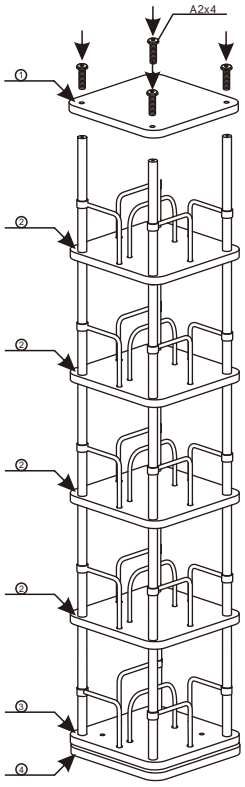

STEP 8

