3 Tier Rotating Bookshelf
Instruction Manual

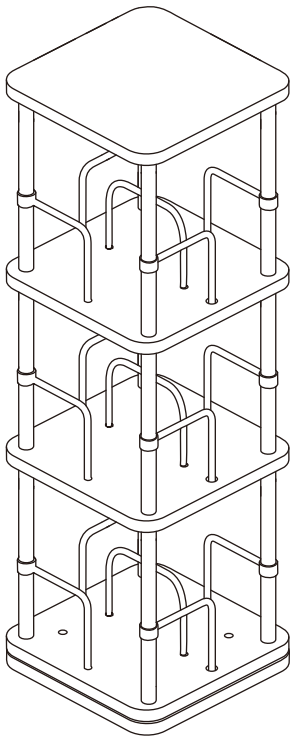

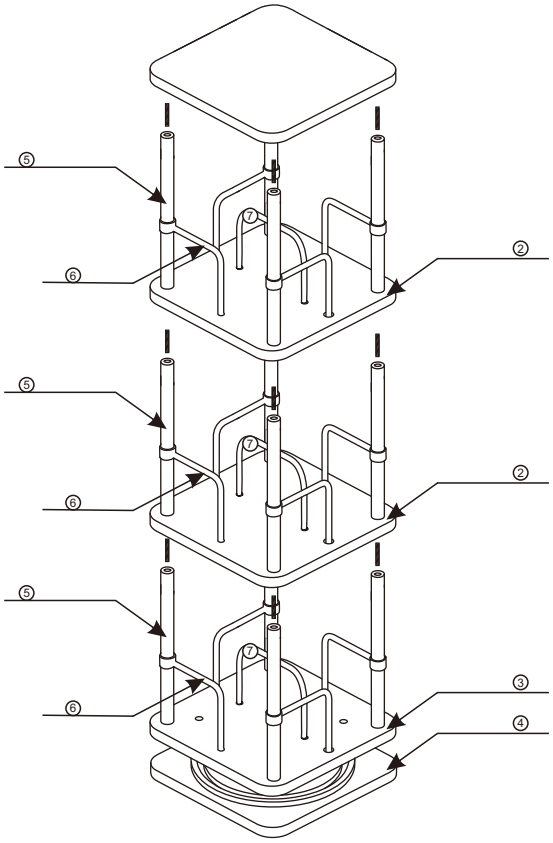

3 Tier Rotating Bookshelf

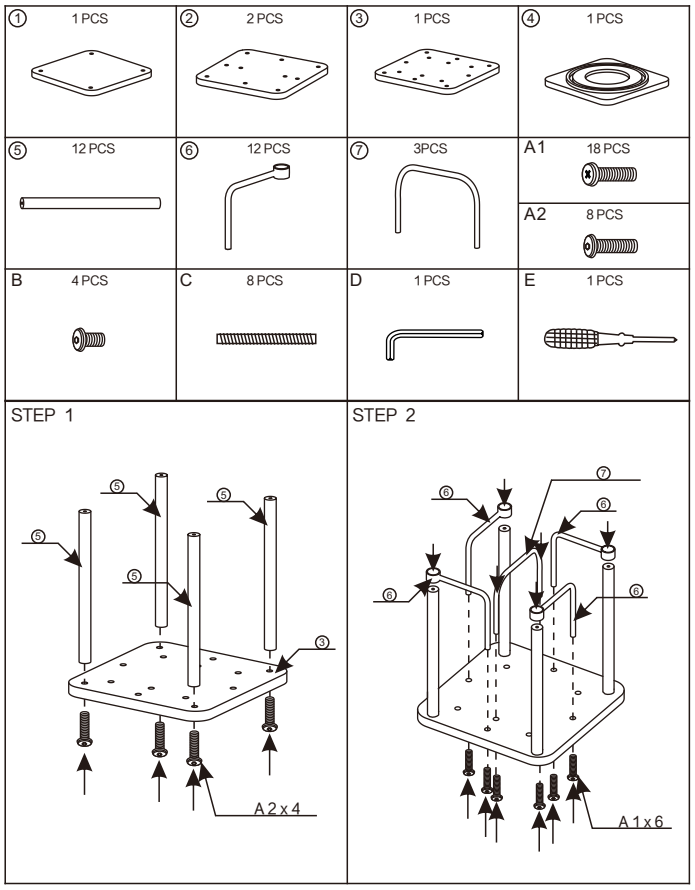

3 Tier Rotating Bookshelf

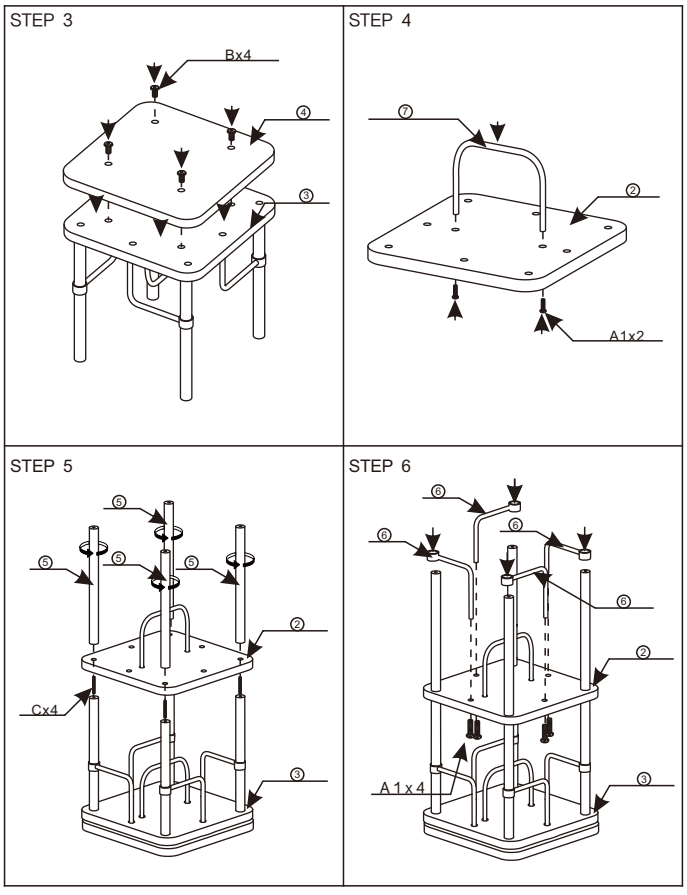

3 Tier Rotating Bookshelf

STEP 7

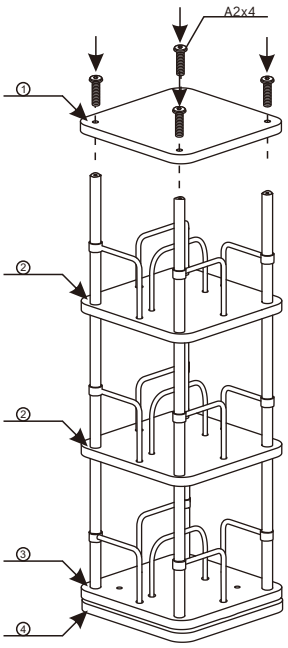

STEP 8

