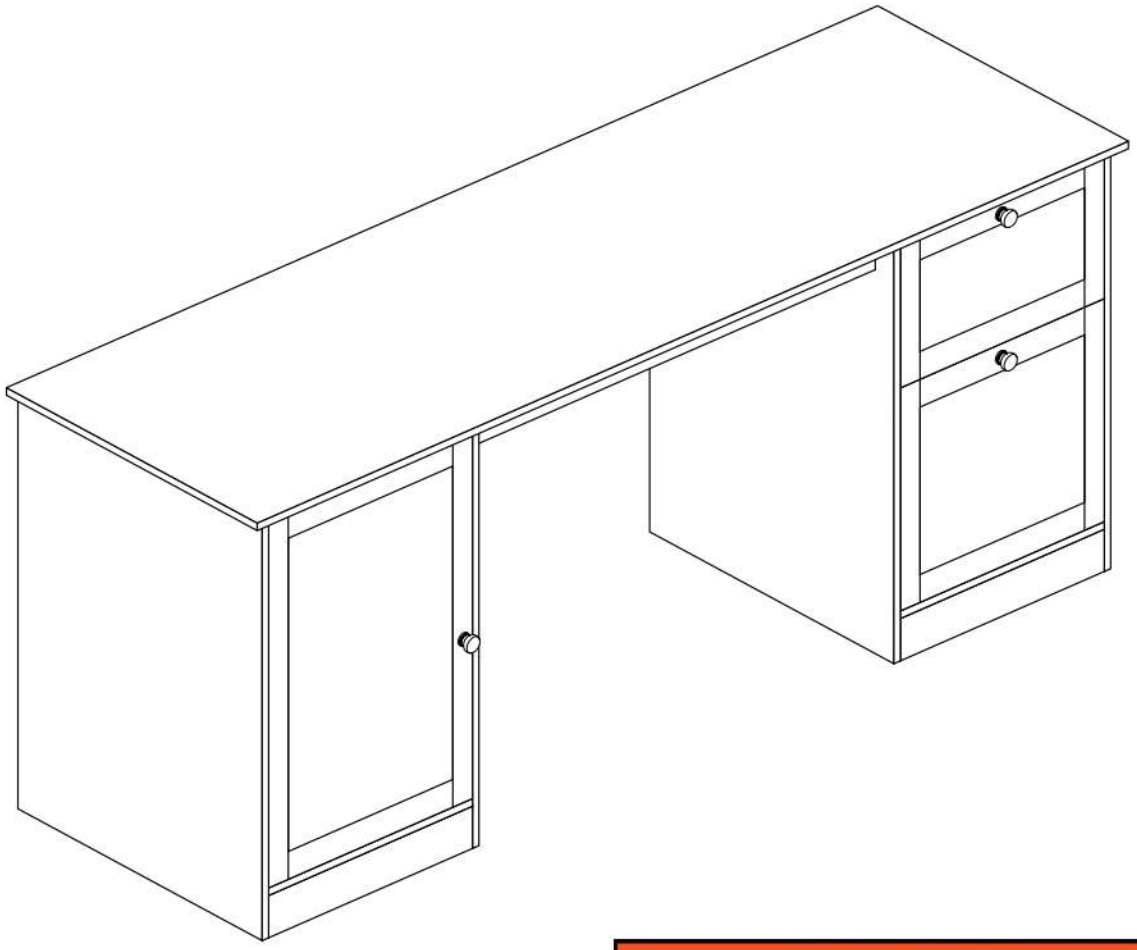

⚠ WARNING



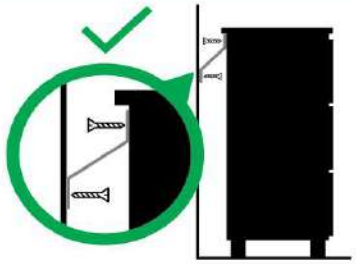

Children have died from furniture tipover.

- ALWAYS secure this furniture with an anchor device.
- NEVER allow children to stand, climb or hang on drawers, doors, or shelves.
- NEVER open more than one drawer at a time.
- Place heavy items down low.

NEVER put a TV on this furniture



Ax30	Bx30	Cx40	Dx12	Ex2	Fx12	Gx4
Hx24	Ix3	(CR) x2	(CL) x2	(DR) x2	(DL) x2	Jx2
Kx8	Lx16	Mx2	Nx4			

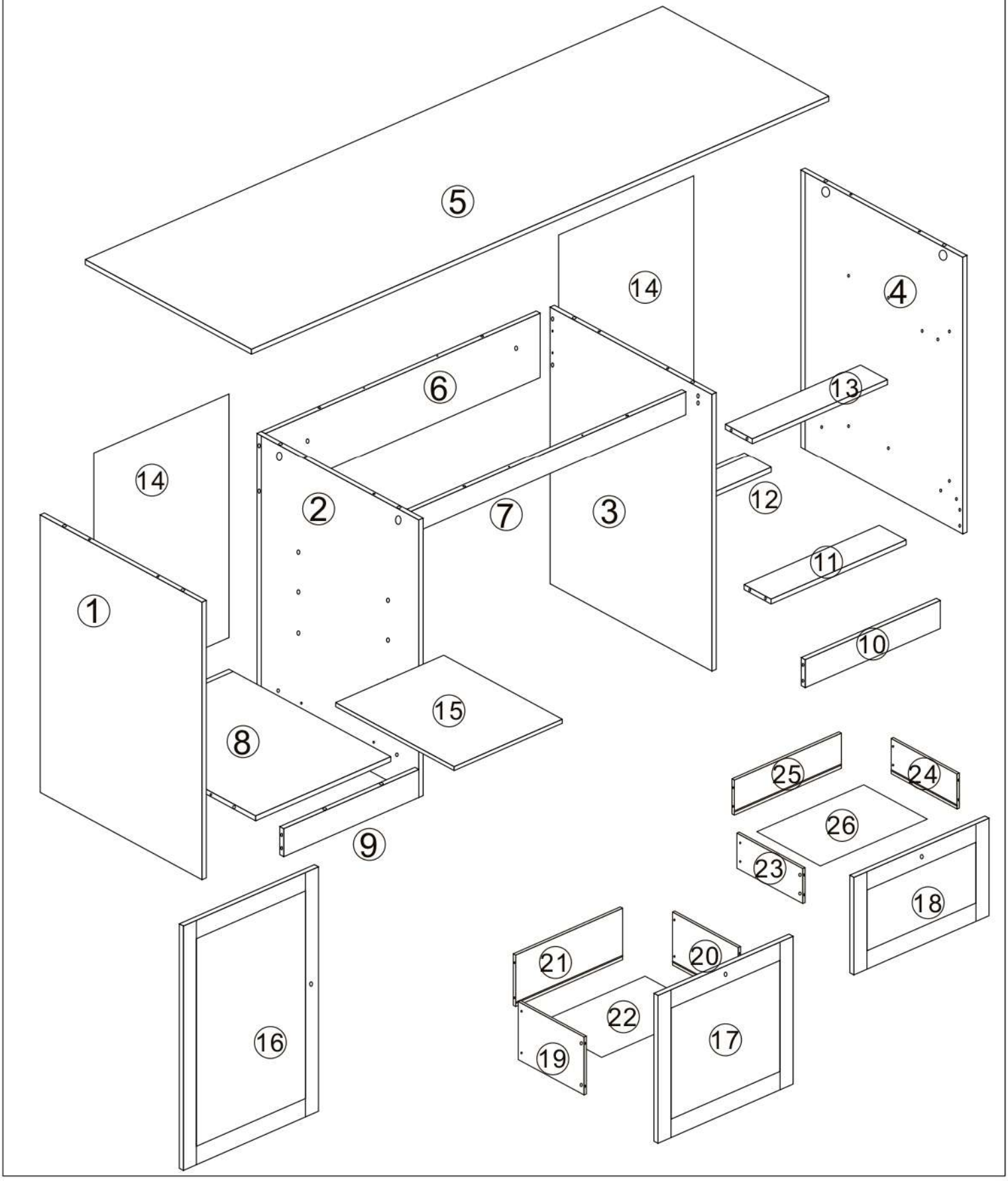

1

Connect panel (10) and (11), panel (8) and (9) separately with wooden dowels (C).

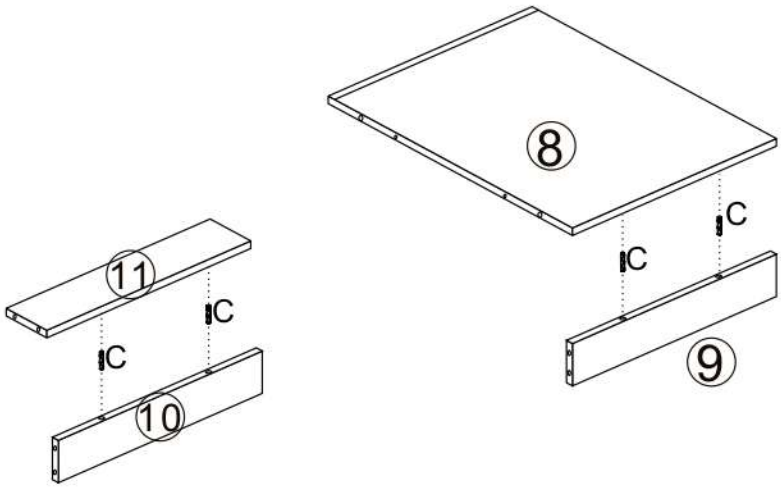

2

Fix left slides (CL) on panel (3) and right slides (CR) on panel (4) with screws (H).

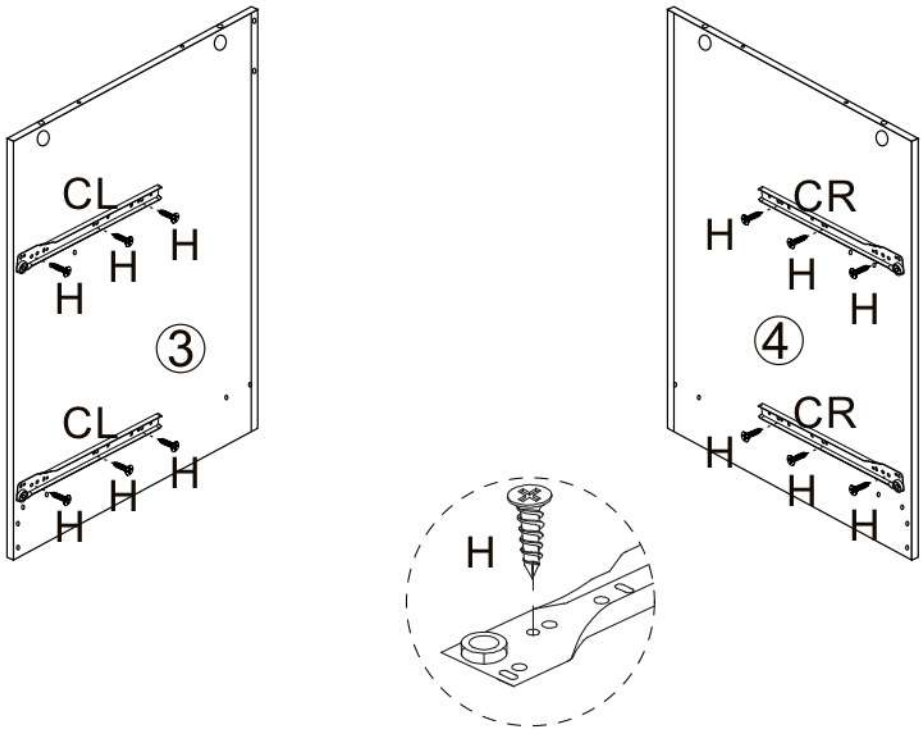

3

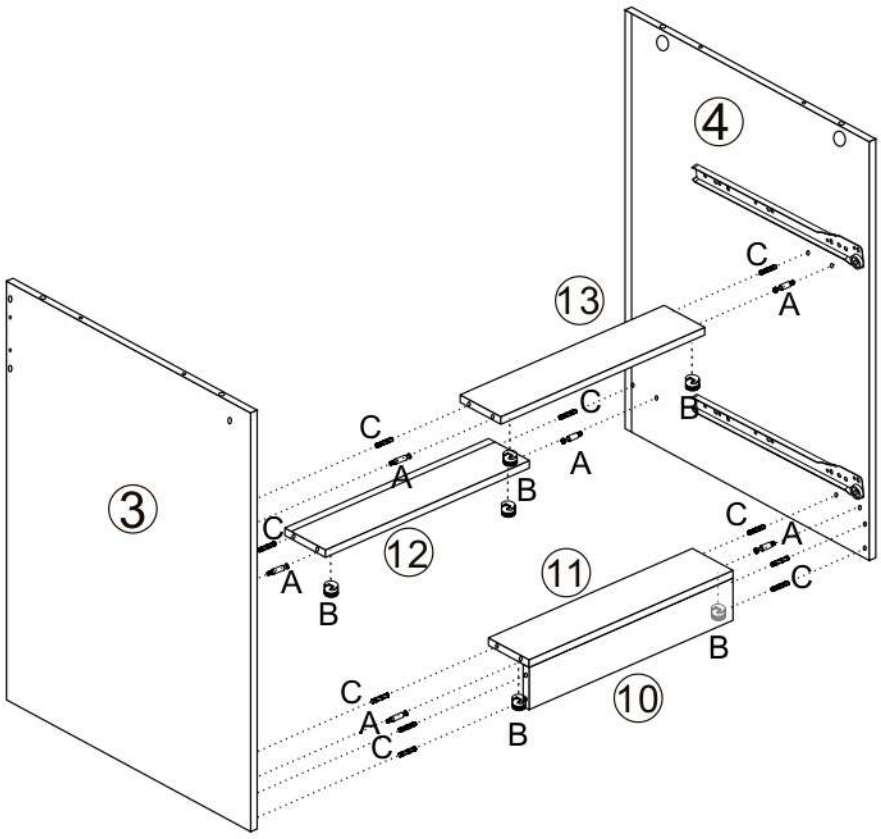

Assemble panels (10) (12) (13) between panels (3) and (4), screws with (A), wooden dowels (C), then lock with parts (B).

4

Insert wooden dowels (C) and screws (A) into side panels (1) and (2),connect panel (8) and (9), fasten with cams (B) to assemble left cabinet frame.

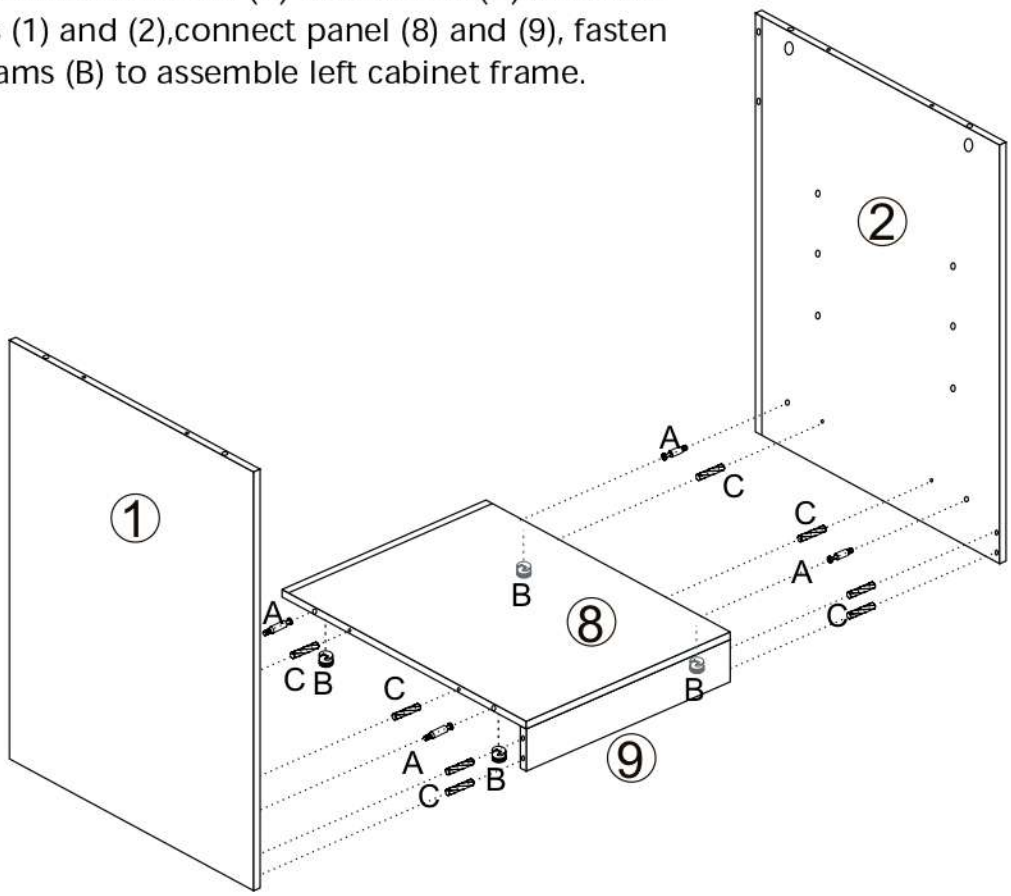

5 Install screws (A) (D),wooden dowels (C) on side panels (2) and (3). Connect panel (6) and (7),lock with cams (B) to conbine two cabinet sections.

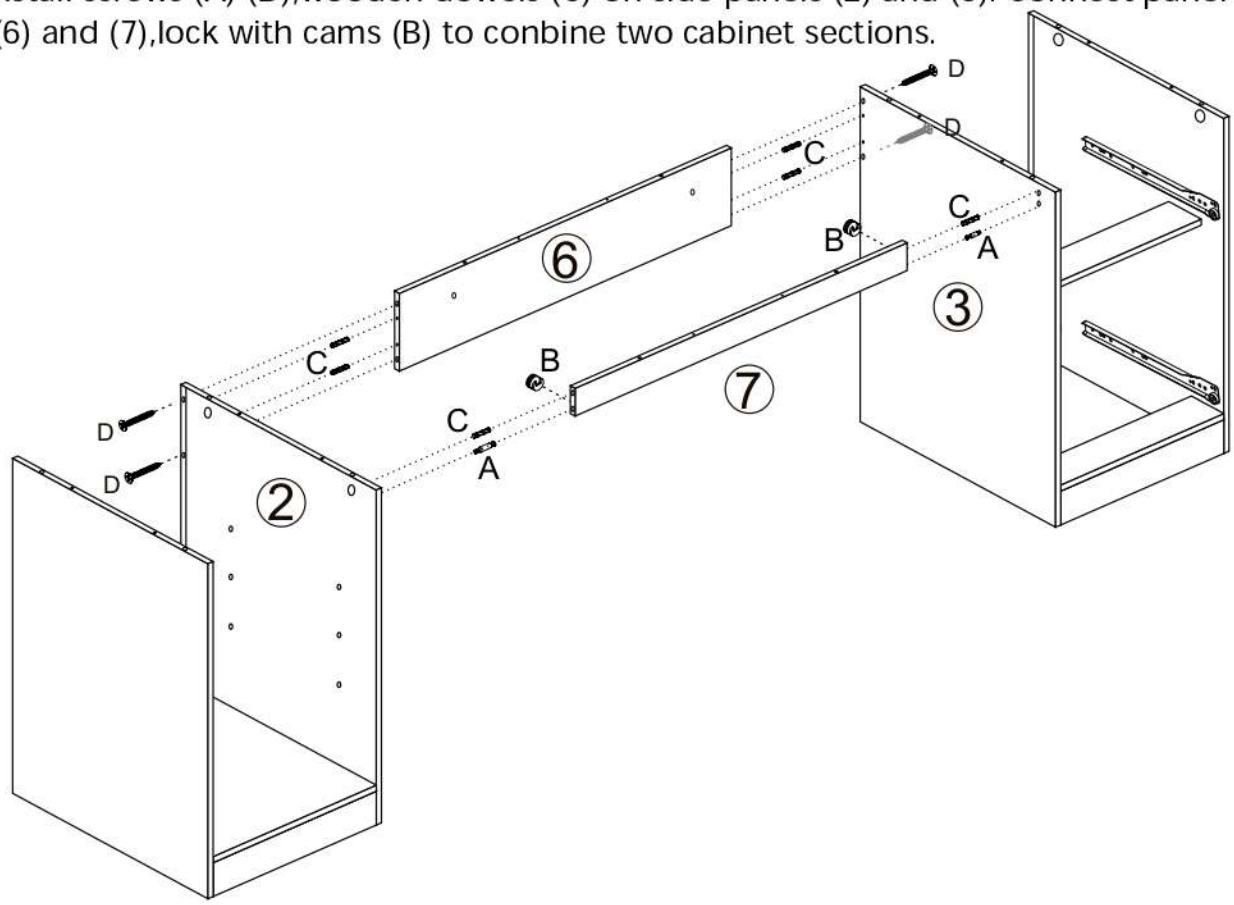

6 Insert baffle panels (14) on both ends of cabinet. Install leveling feet (K) under the cabinet.

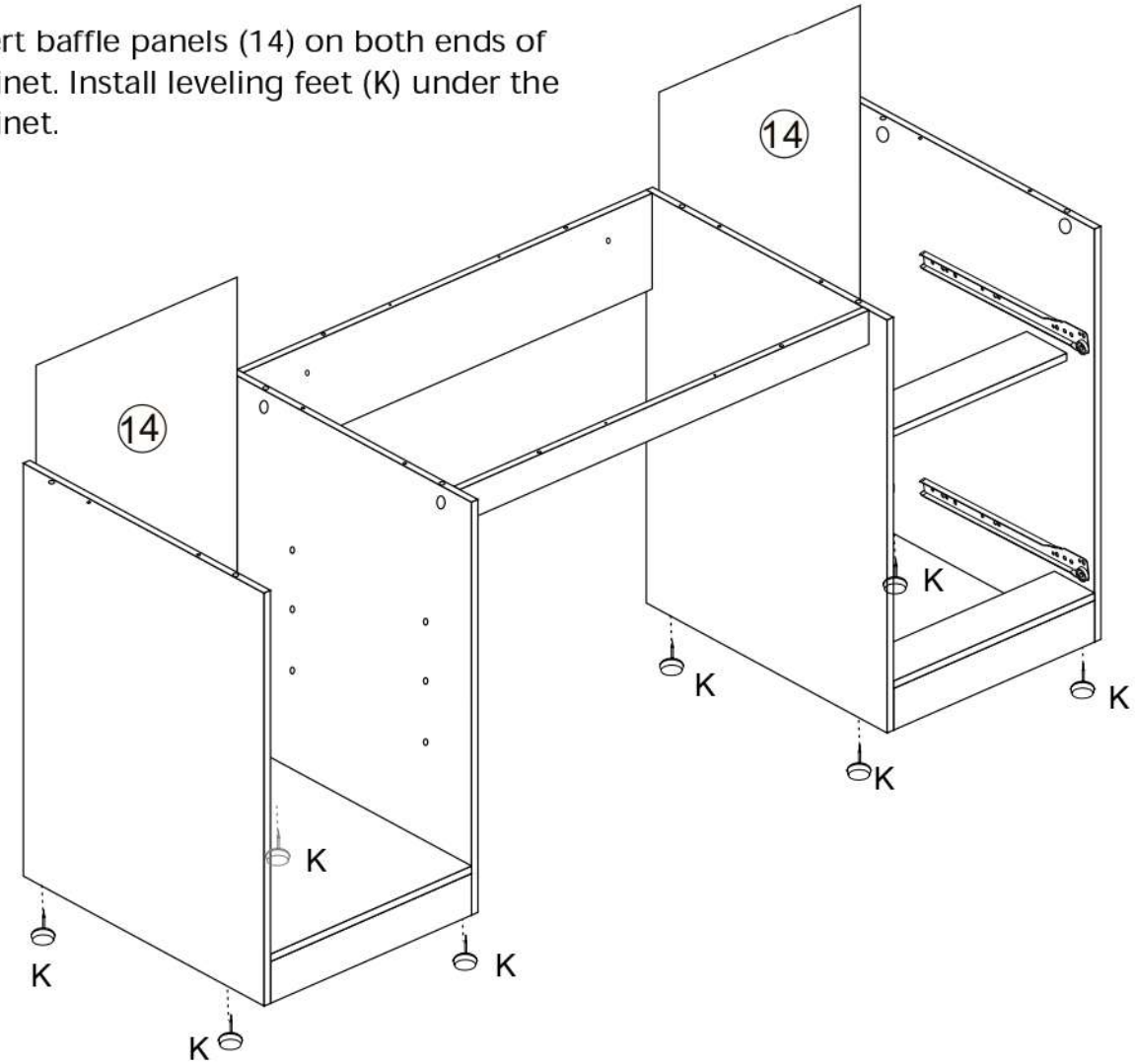

7 Pre-install screws (A) (J), wooden dowels (C) on cabinet, place top panel (5) and secure with cams (B).

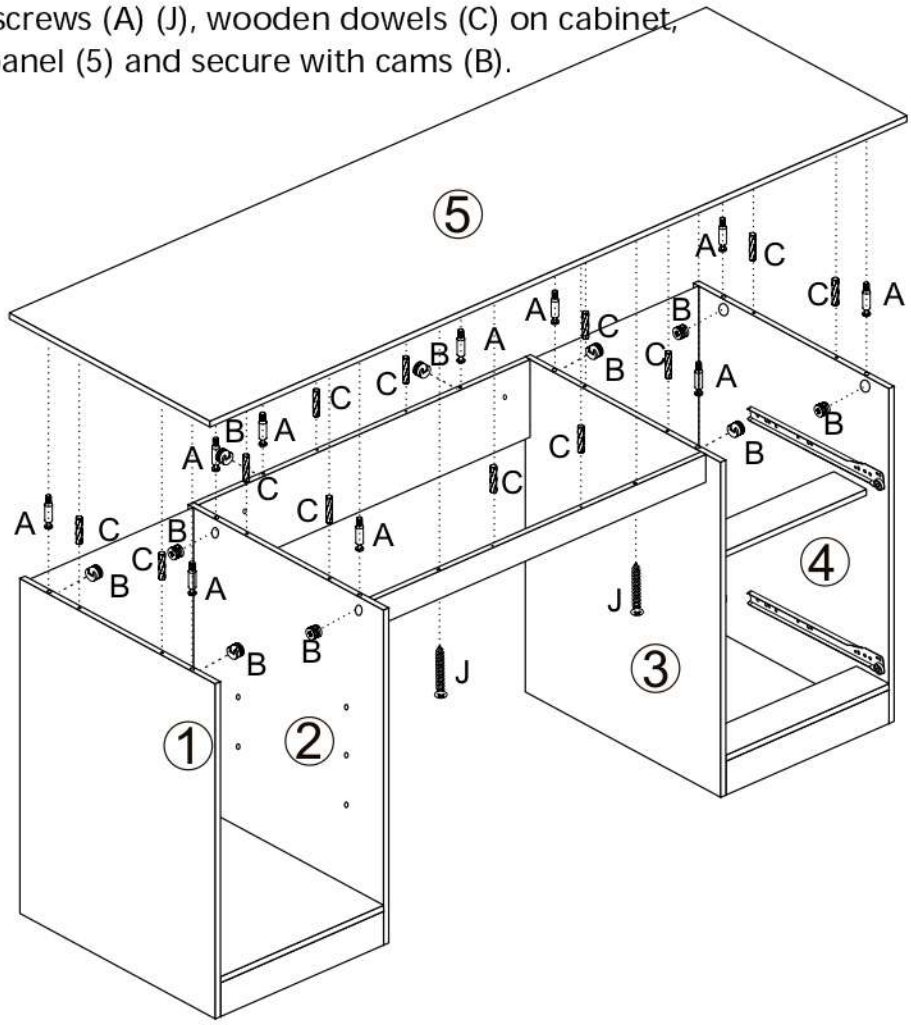

8 Attach panel (15) to the left side of cabinet with screws (G).

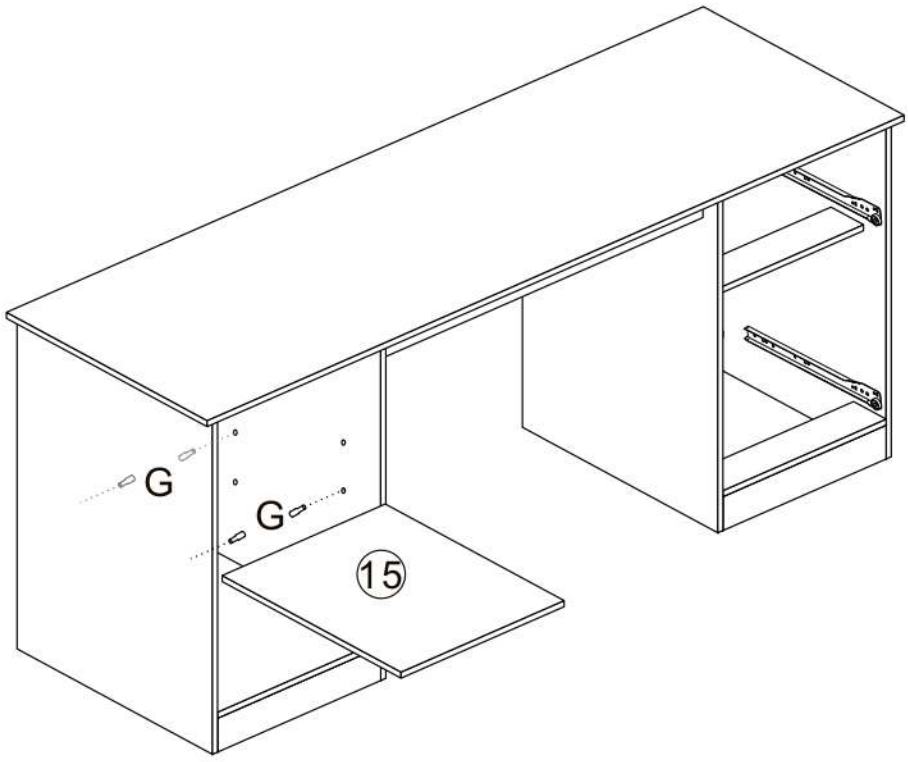

9

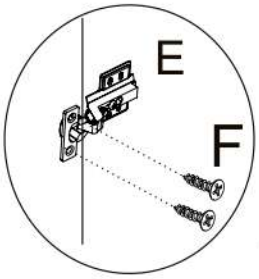

x2

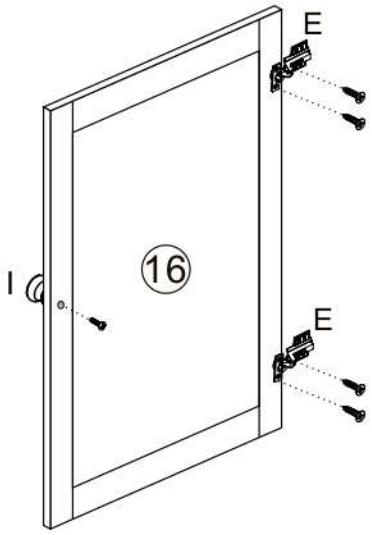

Mount two hinges (E) onto door panel (16) with screws (F), then install handle (I).

10

Assemble drawer sides (23) (24) (25) with screws (D) and fit base panel (26)

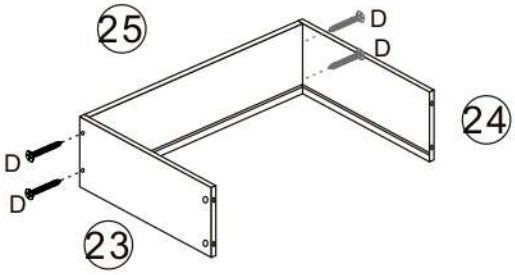

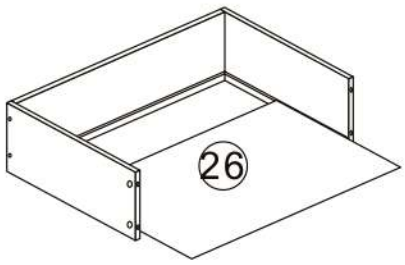

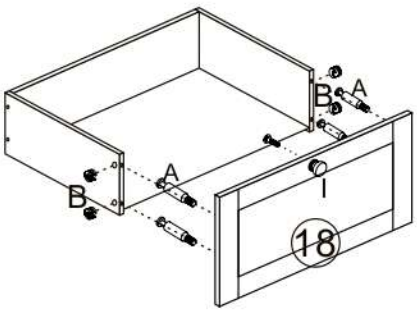

Attach front panel (18) using screws (A) and cams (B).

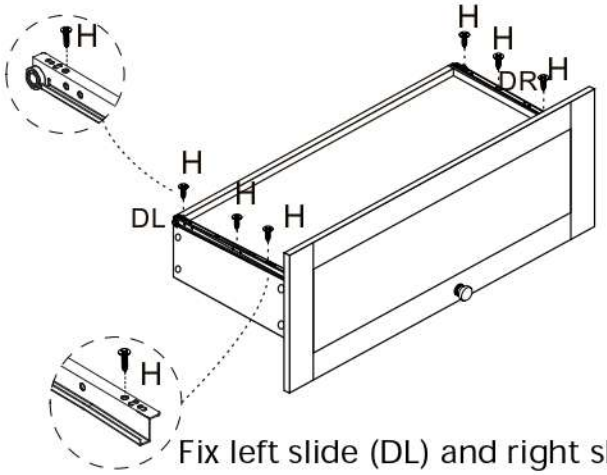

Fix left slide (DL) and right slide (DR) on drawer with screws (H).

11

Assemble drawer sides (19) (20) (21) with screws (D) and fit base panel (22).

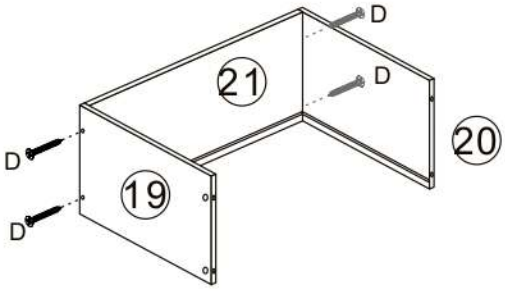

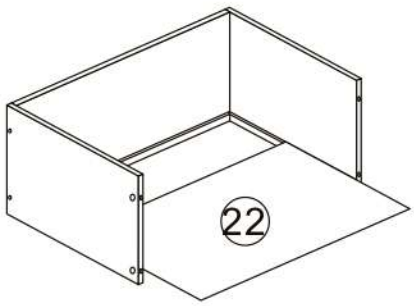

Attach front panel (17) using screws (A) and cams (B).

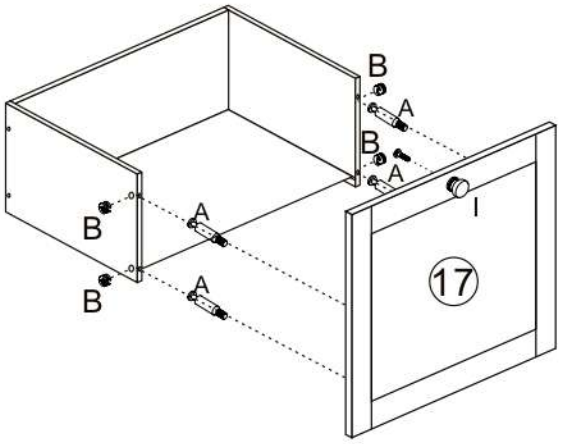

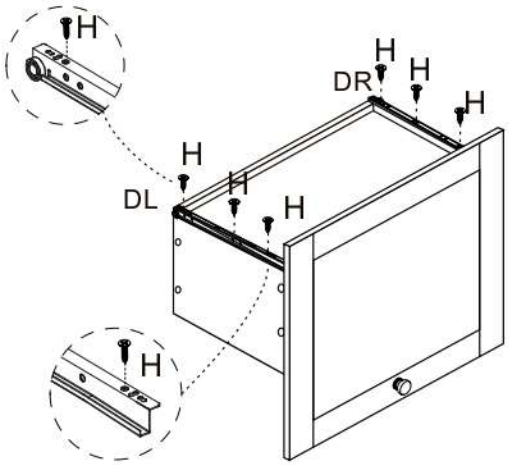

Fix left slide (DL) and right slide (DR) on drawer with screws (H).

12

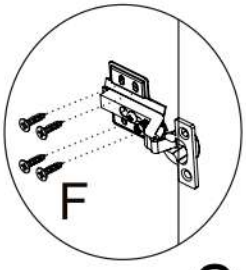

x2

Slide assembled drawer (18) (17) into cabinet slides.

Mount door panel (16) onto cabinet with screws (F).

13

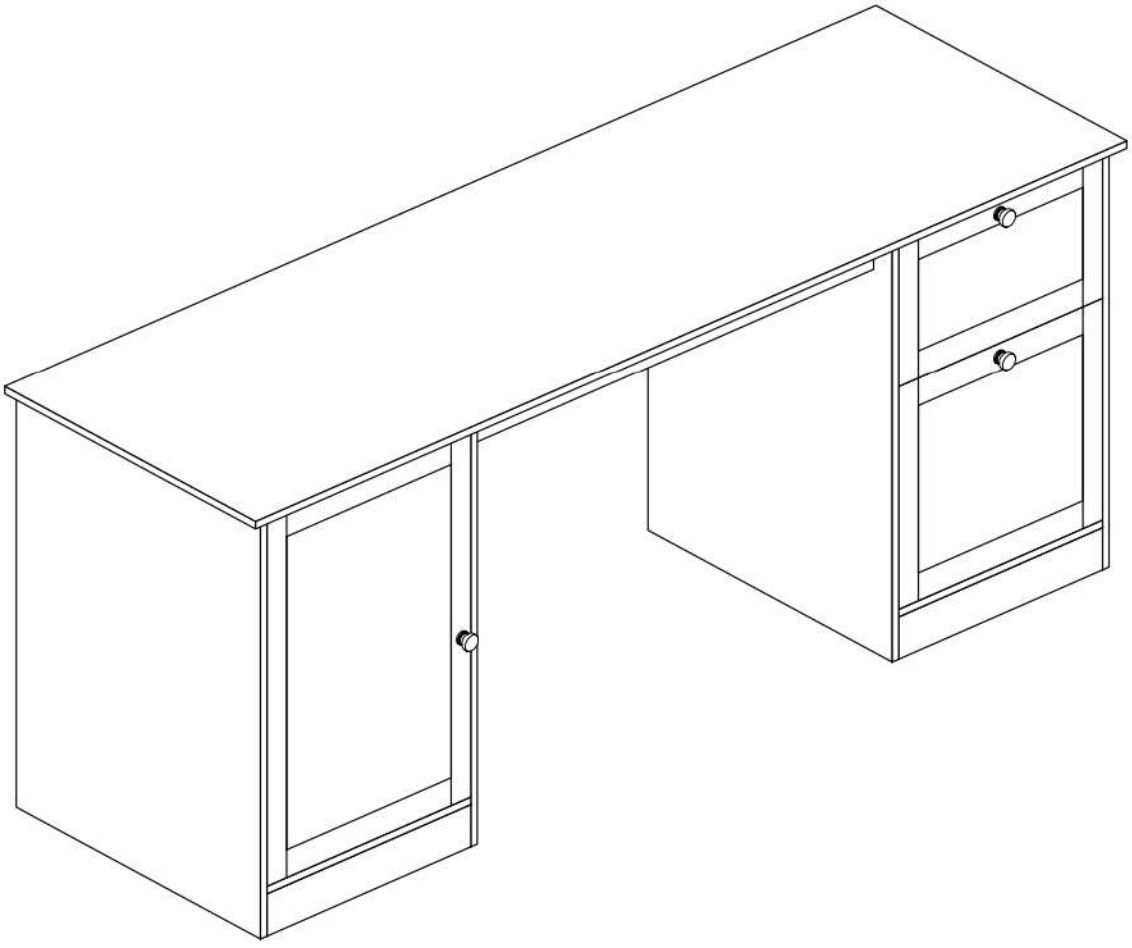

14

