PHOENIX
TAPWARE, SHOWERS & ACCESSORIES

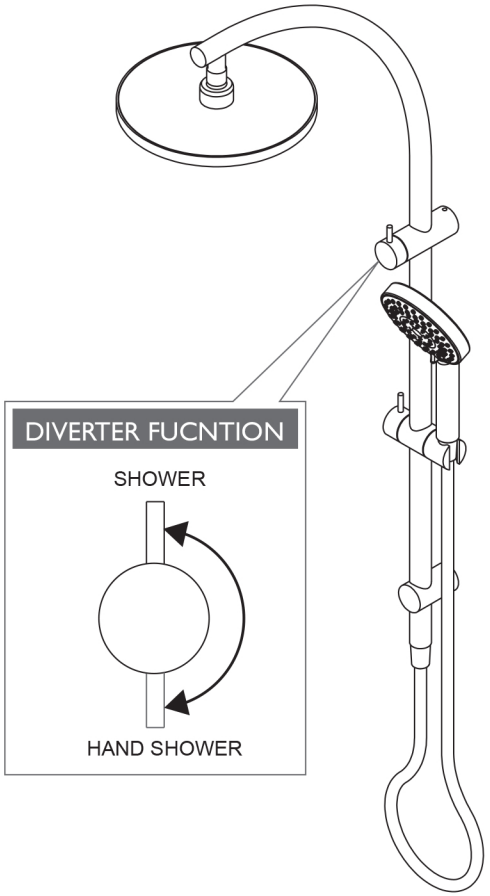

1

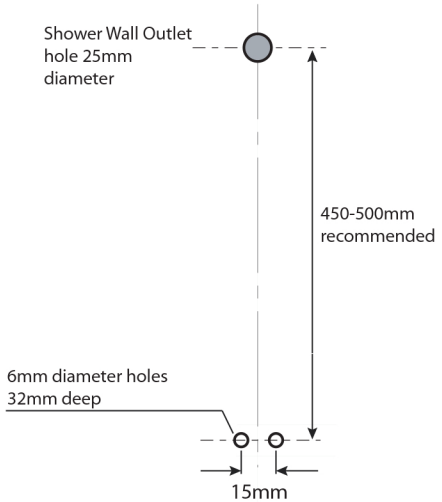

2

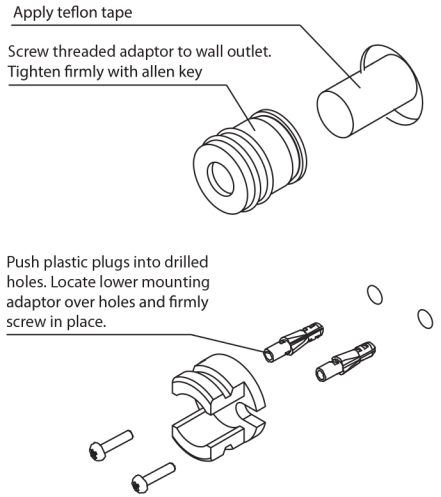

3

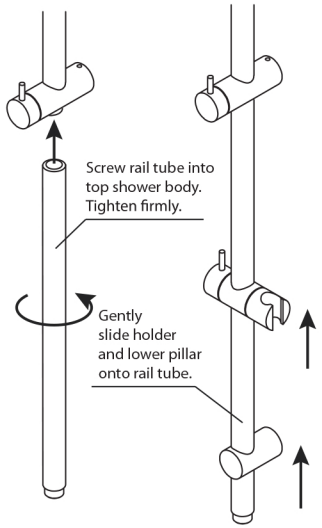

4

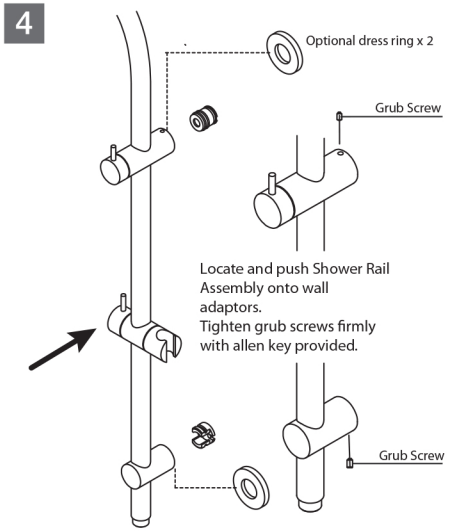

5

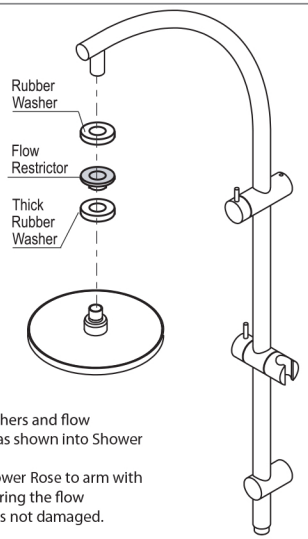

Insert washers and flow restrictor as shown into Shower Rose.
Screw Shower Rose to arm with care, ensuring the flow restrictor is not damaged.

6

Insert washers and flow restrictor as shown into Shower Hose.
Screw Shower Hose to Hand Shower and Shower Rail with care.

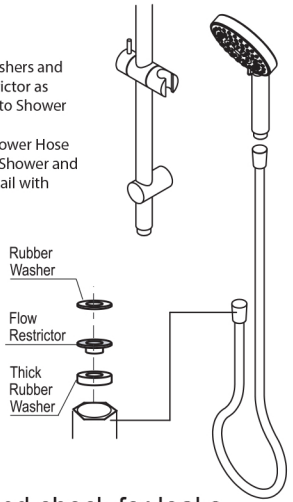

Test and check for leaks

recommended working pressure
150-500 KPa

maximum hot water temperature
75 degrees