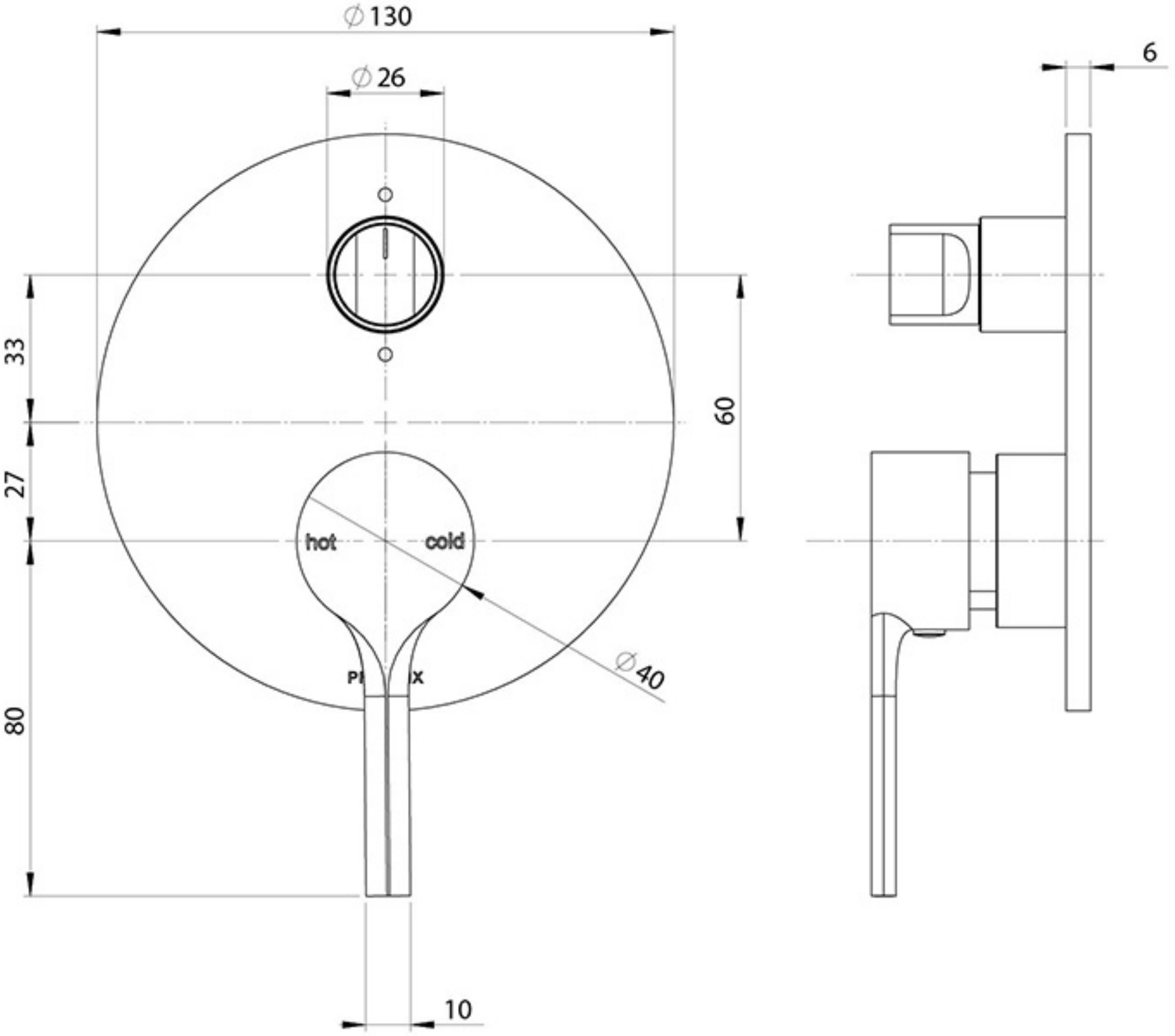
∅130
∅26
6
33
27
80
60
hot
cold
∅40
10