SPECIFICATIONS

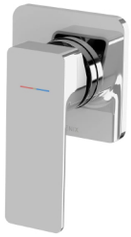

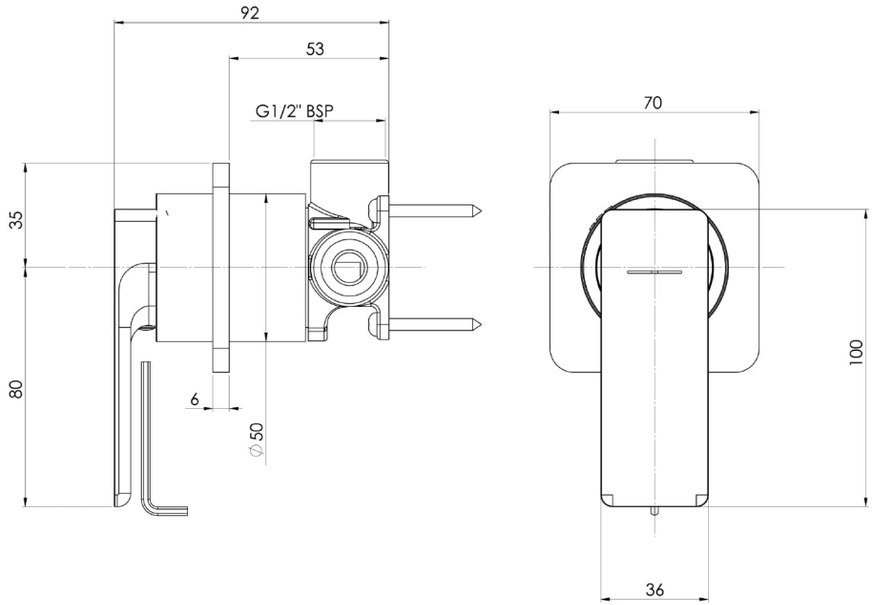

AVAILABLE IN

135-2800-00
Chrome

135-2800-40
Brushed Nickel

135-2800-31
Brushed Carbon

135-2800-10
Matte Black

135-2800-12
Brushed Gold

INFORMATION

Temperature Rating
1 - 75°C

Pressure Rating
150 - 500kPa

MAINTENANCE AND CARE:

— All surfaces should be cleaned with mild liquid detergent or soap and water.
— Do not use cream cleaners or citrus based cleaning products, as they are abrasive.
— Use of unsuitable cleaning agents may damage the surface.
— Any damage caused in this way will not be covered by warranty.