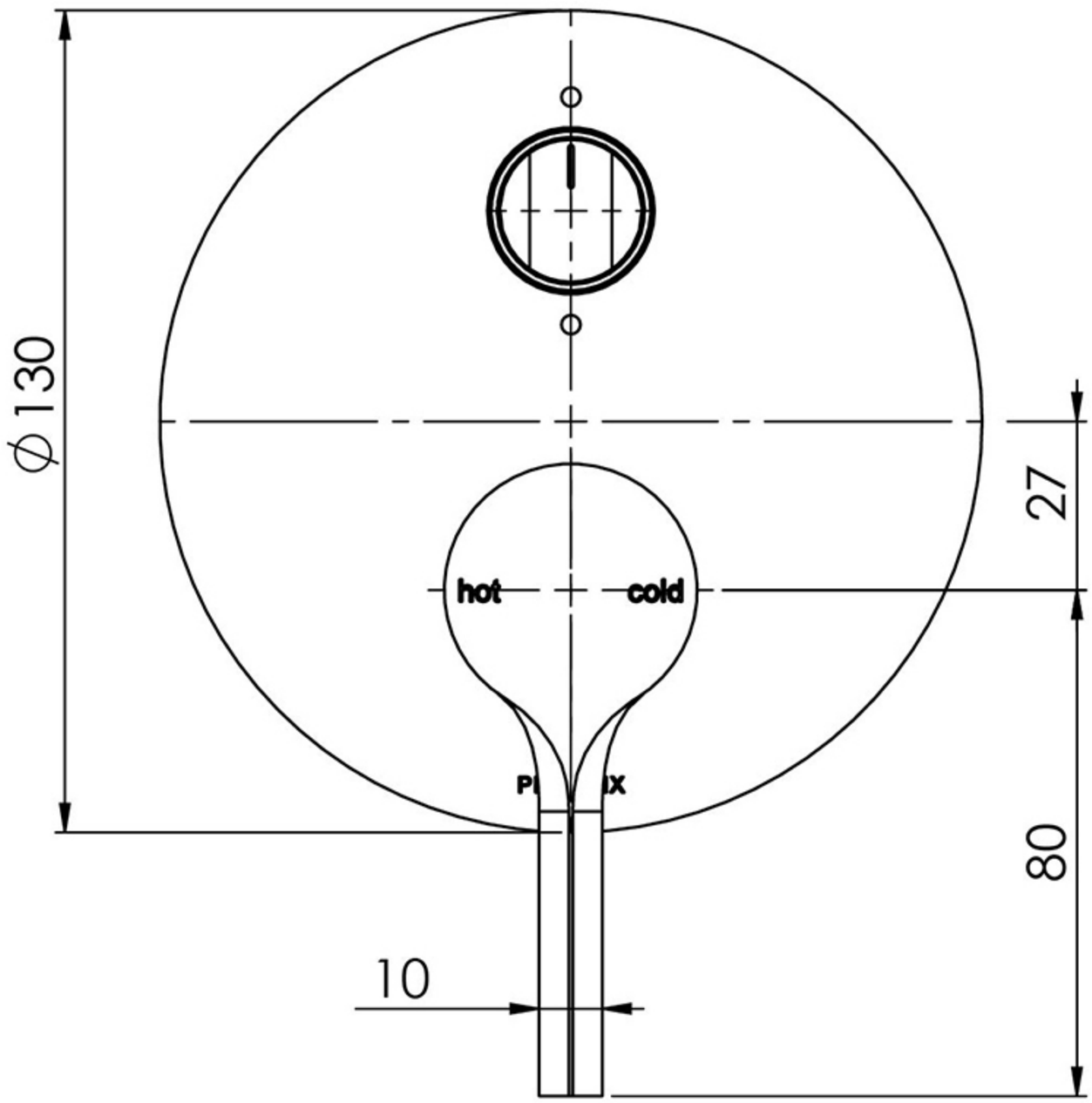
Ø130
hot
cold
27
80
10

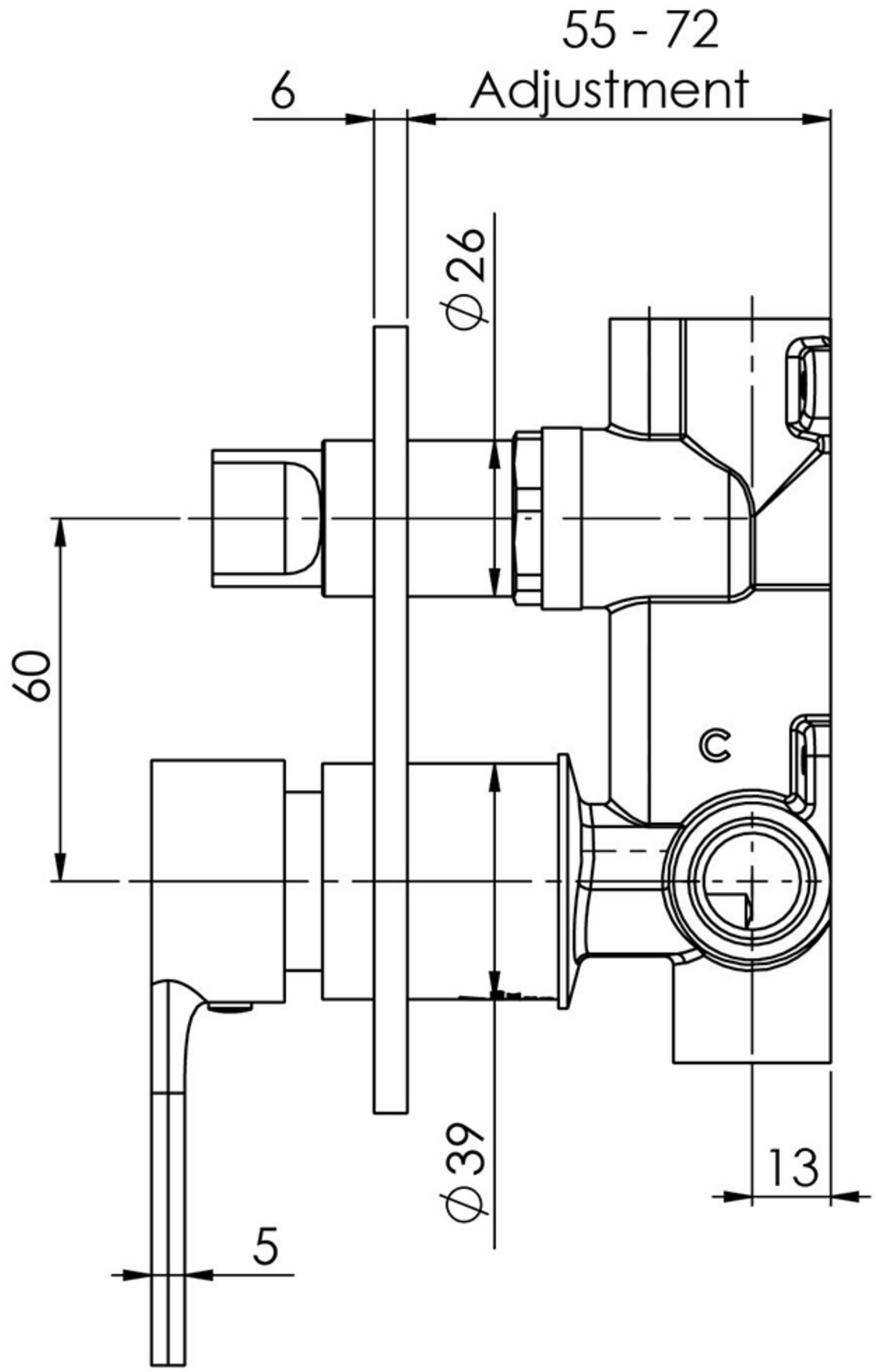
55 - 72
Adjustment
6
Ø26
60
Ø39
13
5