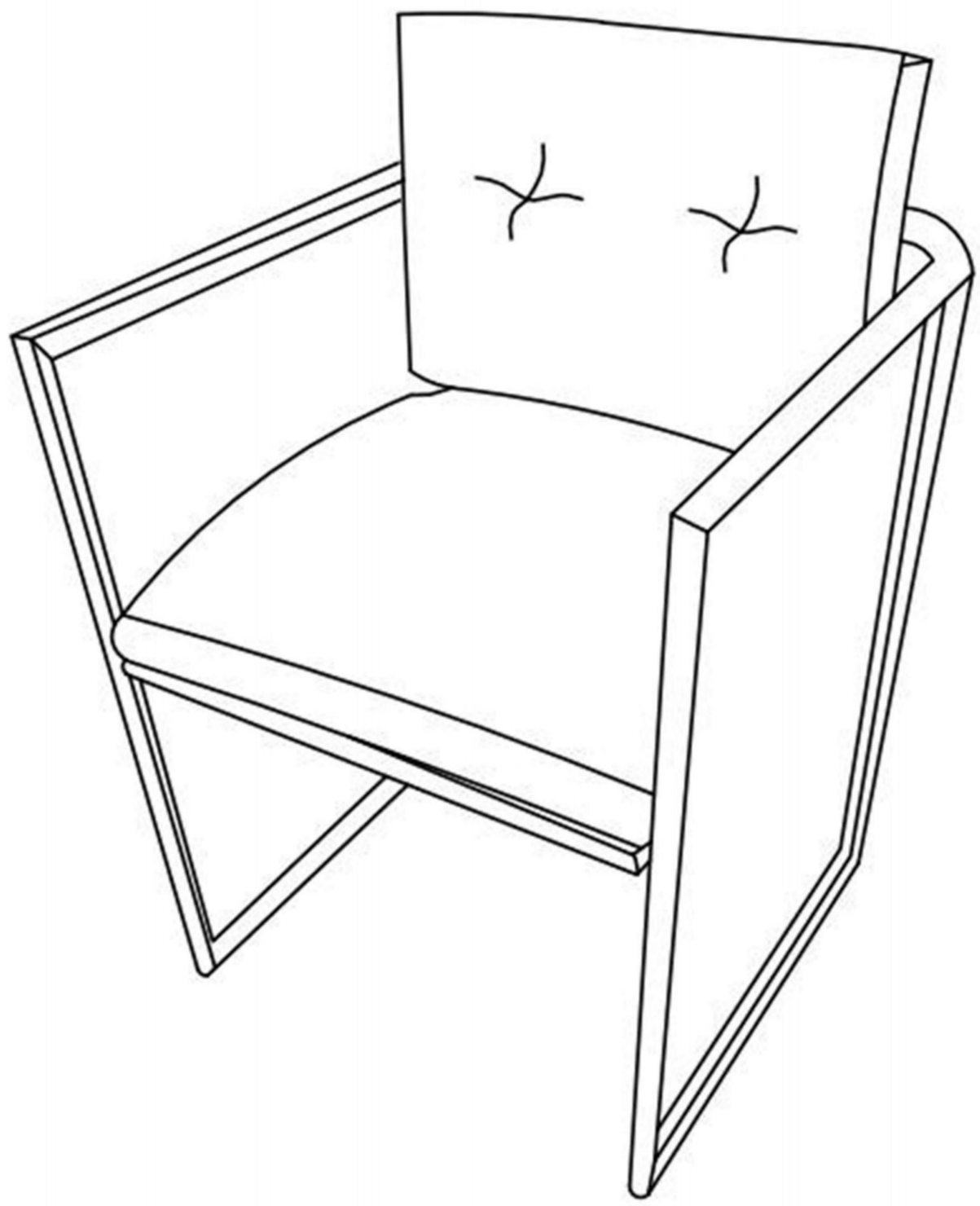

ODDS-KANI-CH-2PC

CAUTION

Do not fully tighten the screws until all of them are aligned properly with the holes.If the legs are uneven on the ground during assem bly, loosen some screws and add some pressure on the frame to ensure the legs are even（sit on the chair carefully）. Then tighten the screws diagonally.

Caution:
Don't let the product fully expose under the Sun or in rain in long time. The tempered glass might explode and the cushion cover will losing the water resistant under prolonged sunshine and raining.

Wipe dean with a dry cloth.Do not use strong liquid cleaners;

To ensure the longevity & durability of your furniture when not in use,

Keep the furniture away from rain or cover it with appropriate protective covers.

TROUBLESHOOTING GUIDE

PROBLEM	SOLUTION
The holes of some parts do not align wtih each other.	• Check that you have the right part for the connection and that the part is in the correct position and orientation. • Always dry fit the parts before connecting them with screws to ensure that you have the correct part for assembly. • Loosen the screws to re-align the connections before tightening them.
The product stands uneven and the legs are not touching the ground uniformly.	• Loosen some screws, apply some pressure on the product to ensure that all legs are in contact with the ground and then tighten the screws diagonally.
There are missing parts in the package.	• Please contact our Customer Service for assistance.

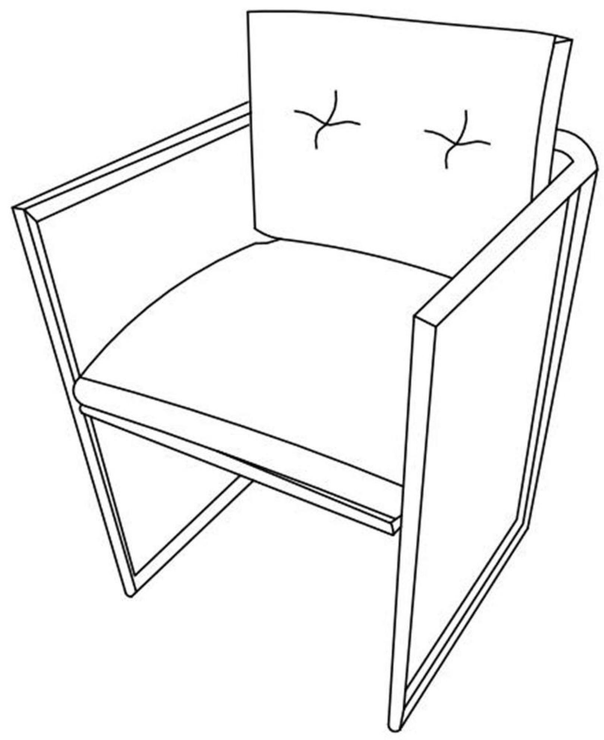
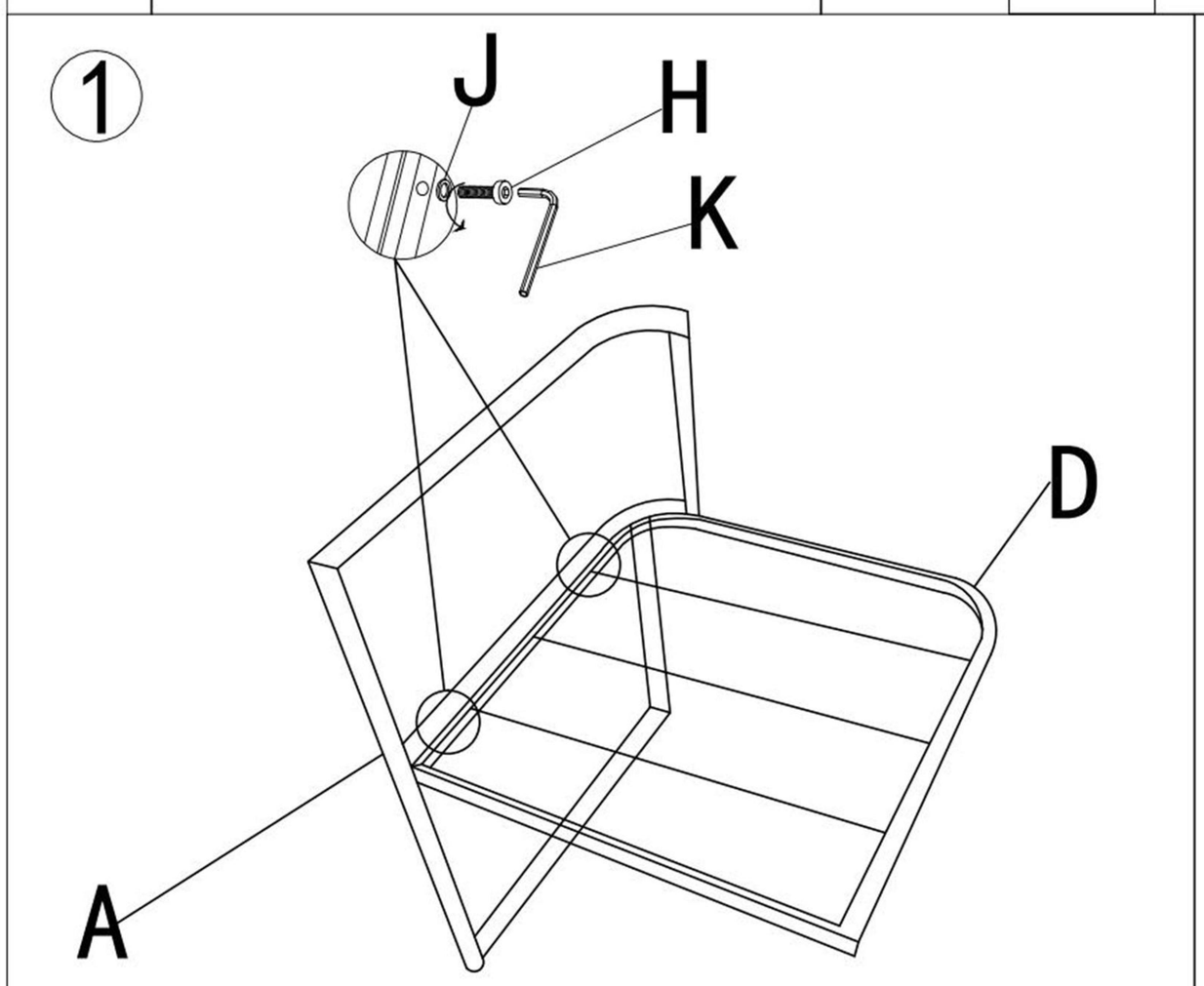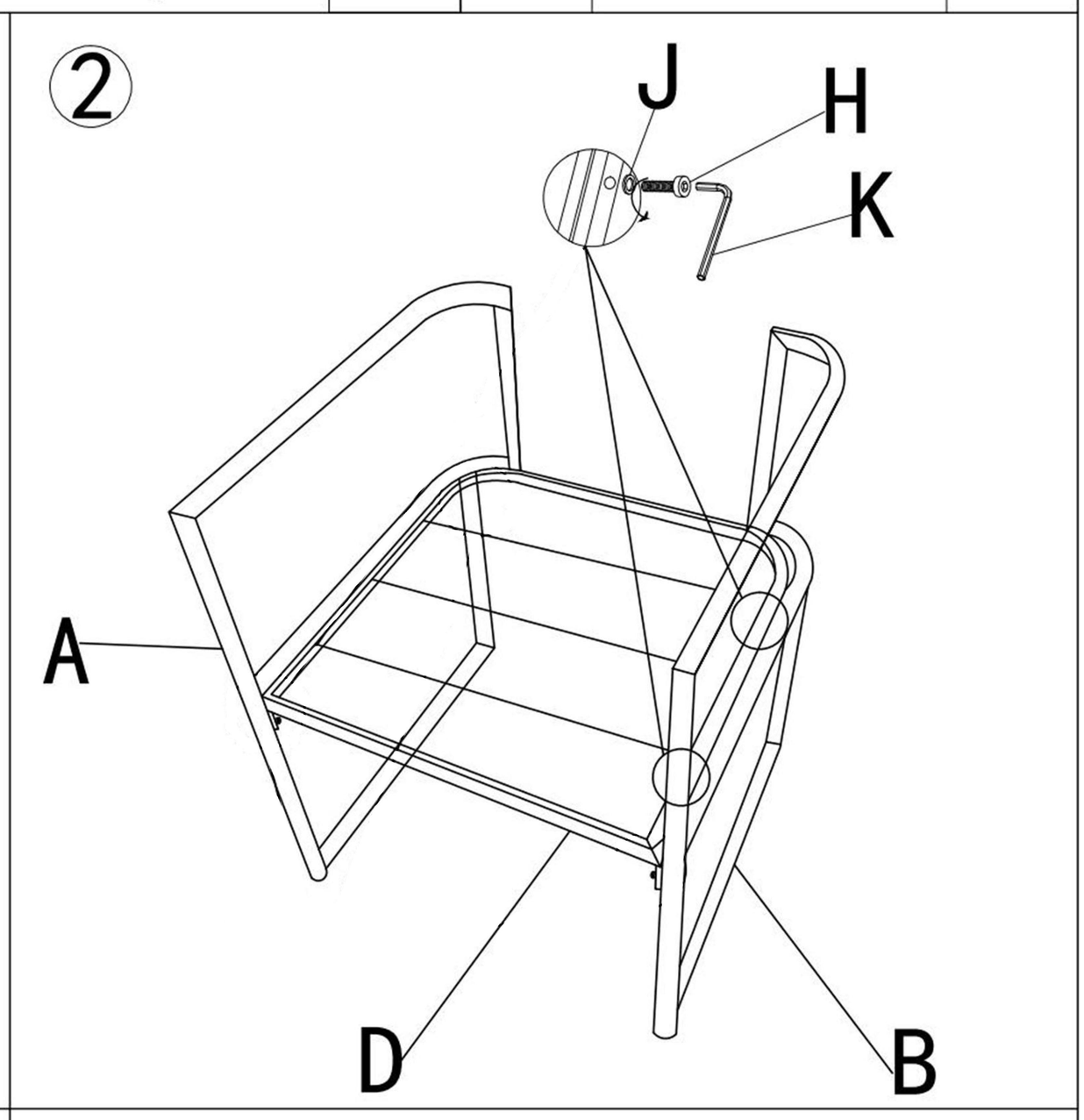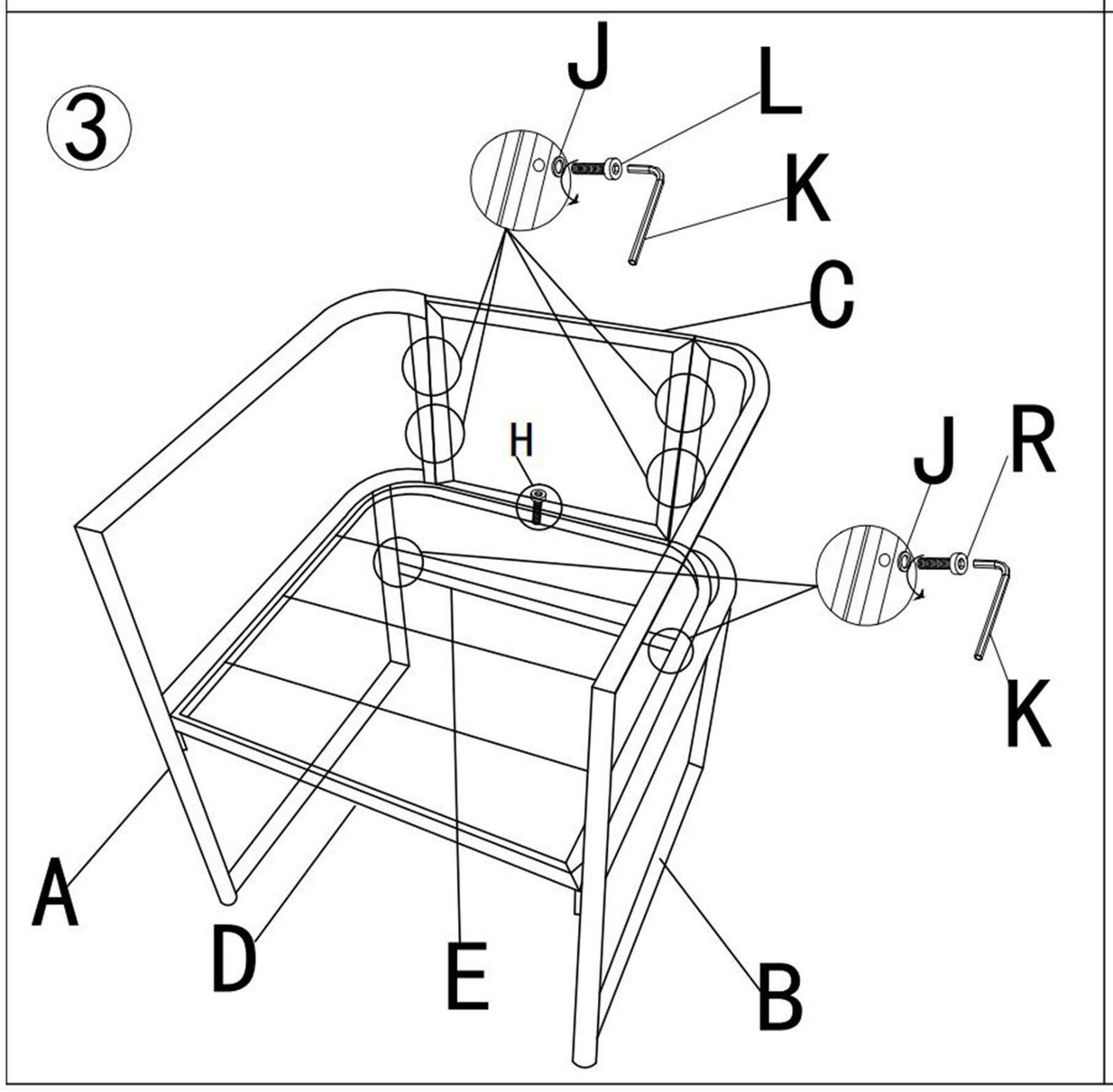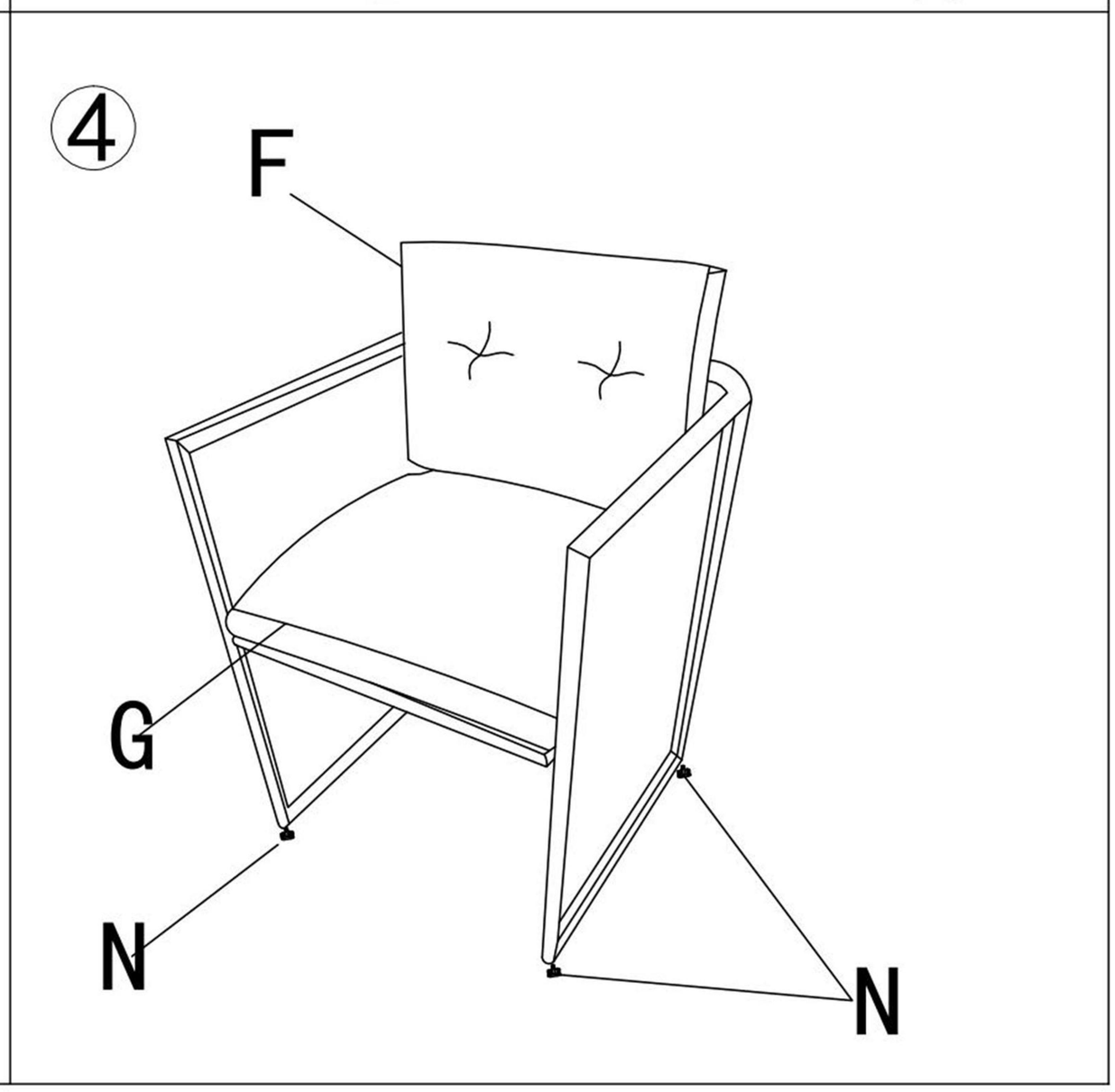
A		1	G		1
B		1	H	M6*40	5
C		1	R	M6*15	4
D		1	L	M6*35	4
E		1	J		15
N		4	F		1
			K		1