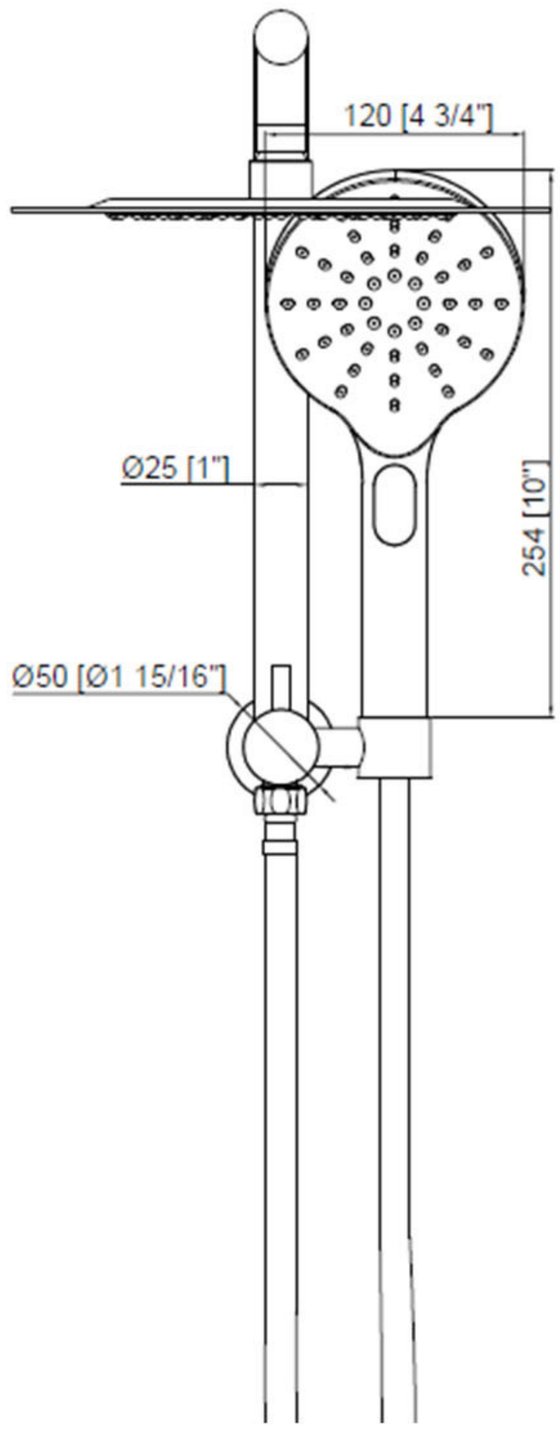
120 [4 3/4"]
Ø25 [1"]
254 [10"]
Ø50 [Ø1 15/16"]

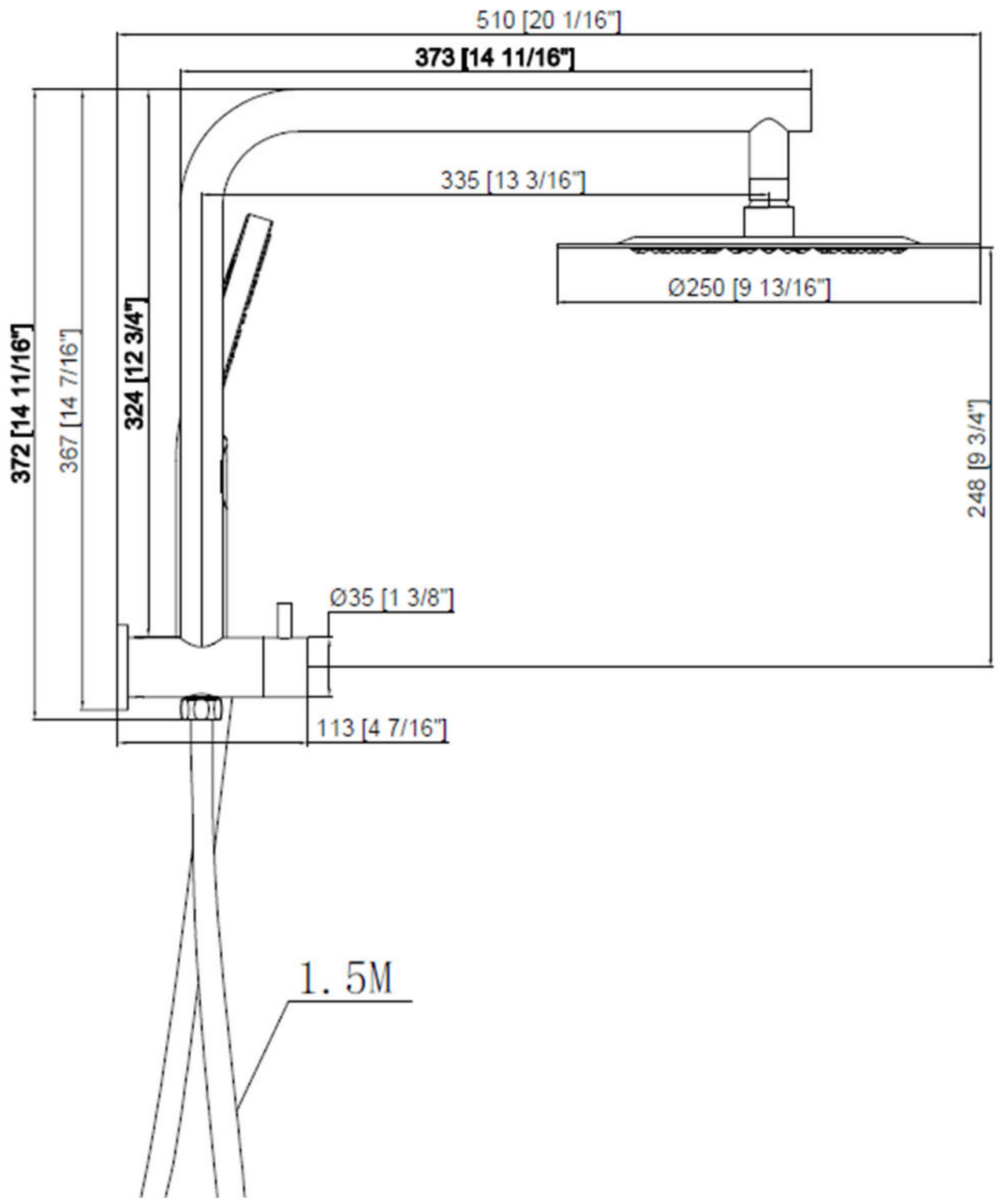
510 [20 1/16"]
373 [14 11/16"]
335 [13 3/16"]
Ø250 [9 13/16"]
372 [14 11/16"]
367 [14 7/16"]
324 [12 3/4"]
248 [9 3/4"]
Ø35 [1 3/8"]
113 [4 7/16"]
1.5M