23.6.20

290X210MM

Assembly instructions

LIVSIP
OUTDOOR GARDEN

SKU: TXL-TB120-BK

Do not fully tighten the screws until all of them are aligned properly with the holes.
If the legs are uneven on the ground during assembly, loosen some screws and add some pressure on the frame to ensure the legs are even (sit on the chair carefully). Then tighten the screws diagonally.

Caution:

Don't let the product fully expose under the Sun or in rain in long time. The tempered glass might explode and the cushion cover will be losing the water resistant under prolonged sunshine and raining.

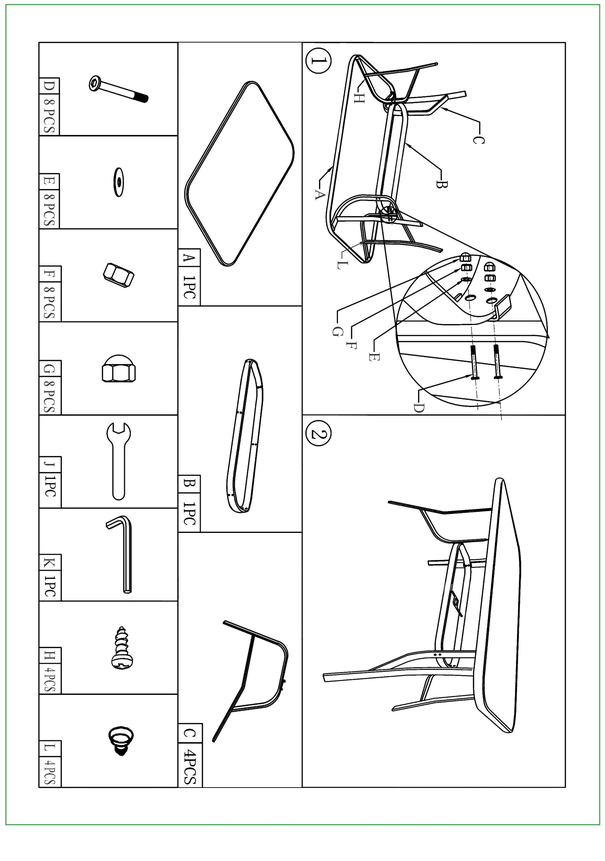

Assembly instructions

LIVSIP
OUTDOOR GARDEN

SKU: TXL-TB120-GY

Do not fully tighten the screws until all of them are aligned properly with the holes.
If the legs are uneven on the ground during assembly, loosen some screws and add some pressure on the frame to ensure the legs are even (sit on the chair carefully). Then tighten the screws diagonally.

Caution:

Don't let the product fully expose under the Sun or in rain in long time. The tempered glass might explode and the cushion cover will be losing the water resistant under prolonged sunshine and raining.

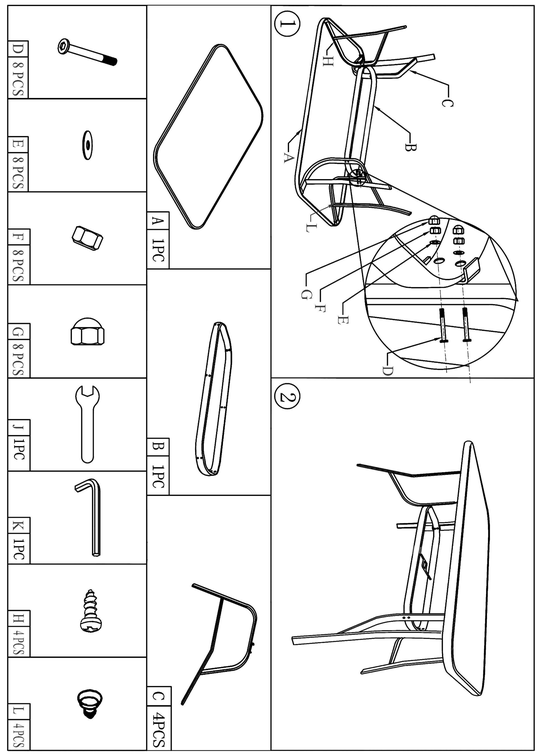

Assembly instructions

LIVSIP
OUTDOOR GARDEN

SKU: TXL-TB140-BK

Do not fully tighten the screws until all of them are aligned properly with the holes.
If the legs are uneven on the ground during assembly, loosen some screws and add some pressure on the frame to ensure the legs are even (sit on the chair carefully). Then tighten the screws diagonally.

Caution:

Don't let the product fully expose under the Sun or in rain in long time. The tempered glass might explode and the cushion cover will be losing the water resistant under prolonged sunshine and raining.

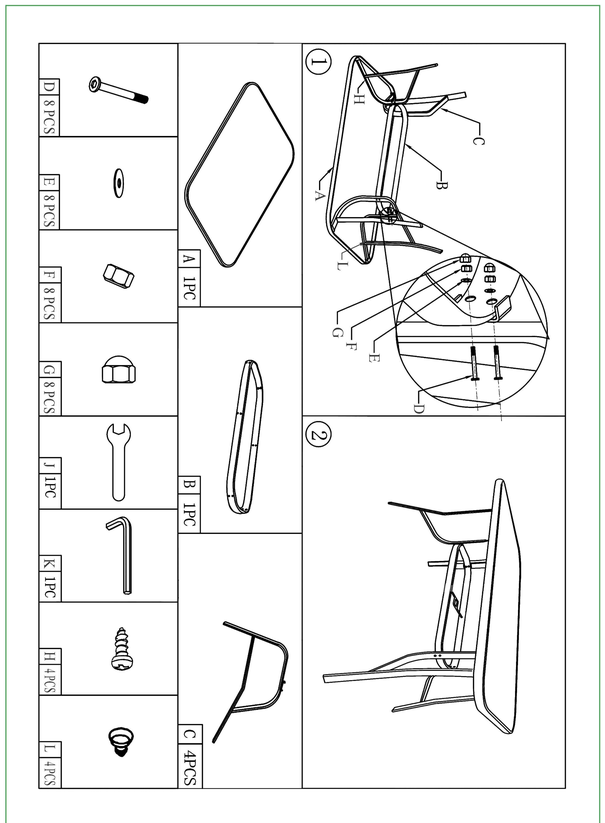

Assembly instructions

LIVSIP
OUTDOOR GARDEN

SKU: TXL-TB140-GY

Do not fully tighten the screws until all of them are aligned properly with the holes.
If the legs are uneven on the ground during assembly, loosen some screws and add some pressure on the frame to ensure the legs are even (sit on the chair carefully). Then tighten the screws diagonally.

Caution:
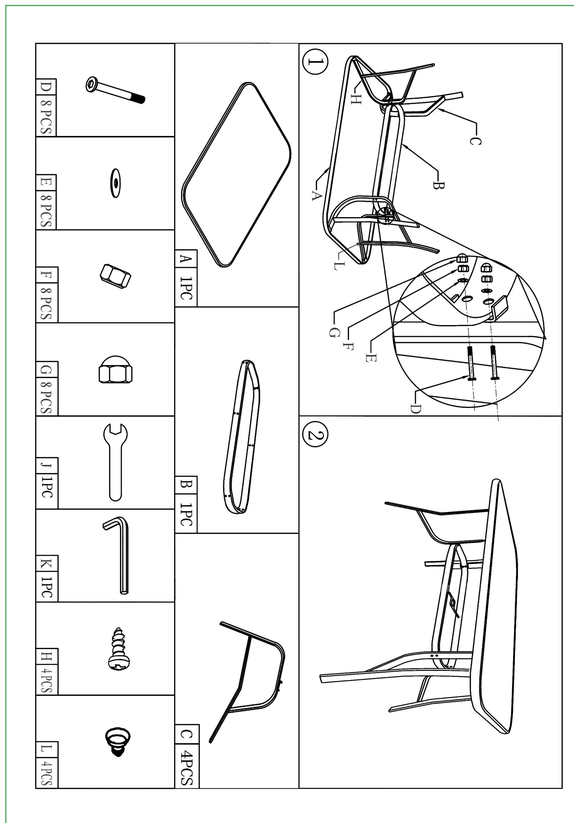
Don't let the product fully expose under the Sun or in rain in long time. The tempered glass might explode and the cushion cover will be losing the water resistant under prolonged sunshine and raining.