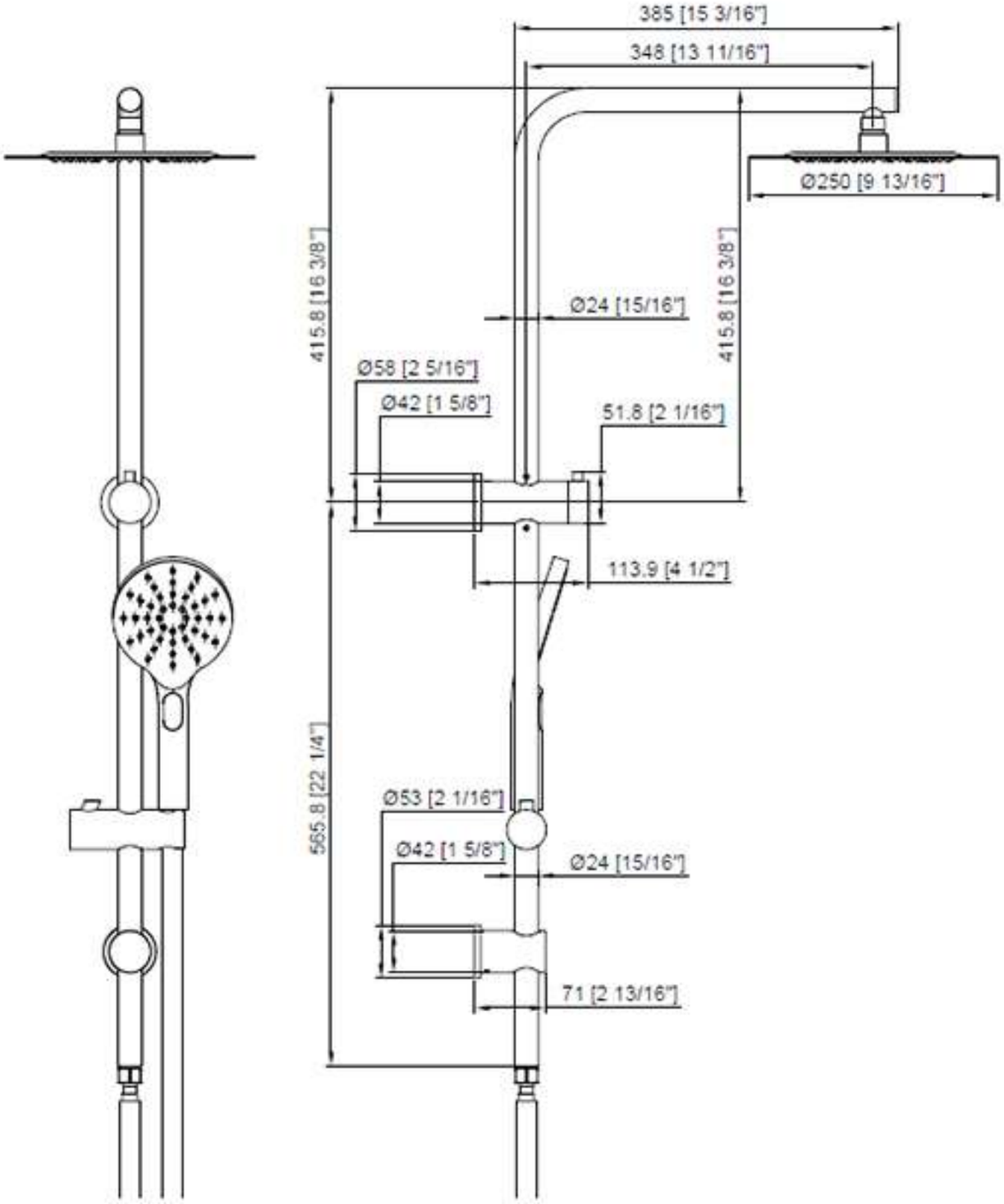
385 [15 3/16"]
348 [13 11/16"]
Ø250 [9 13/16"]
415.8 [16 3/8"]
415.8 [16 3/8"]
Ø24 [15/16"]
Ø58 [2 5/16"]
Ø42 [1 5/8"]
51.8 [2 1/16"]
113.9 [4 1/2"]
565.8 [22 1/4"]
Ø53 [2 1/16"]
Ø42 [1 5/8"]
Ø24 [15/16"]
71 [2 13/16"]

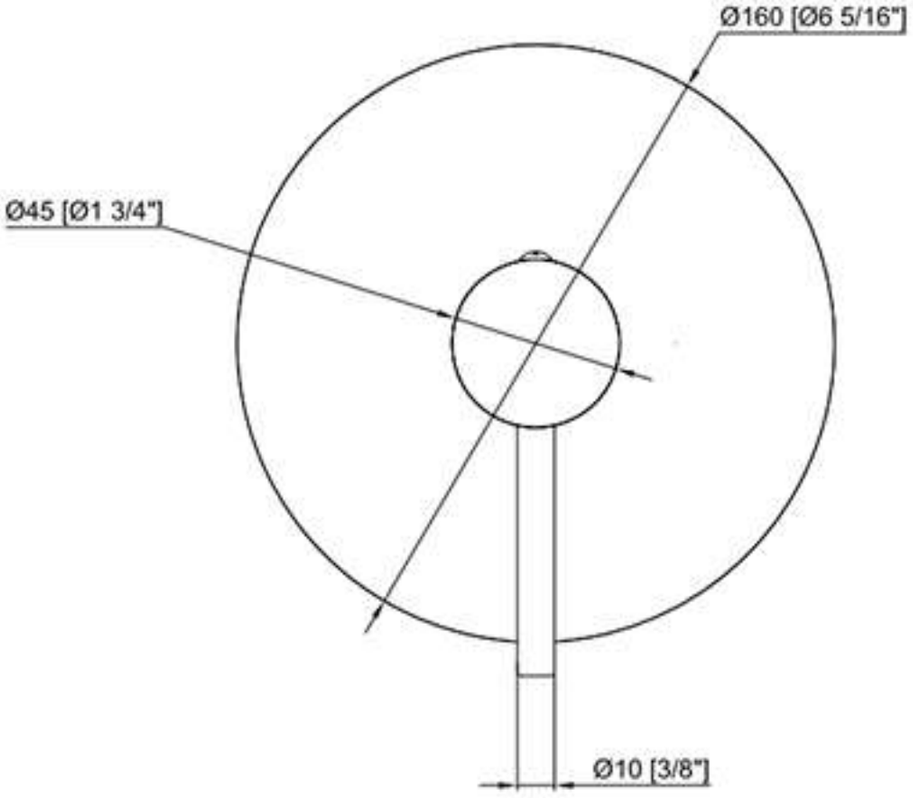
Ø160 [Ø6 5/16"]
Ø45 [Ø1 3/4"]
Ø10 [3/8"]

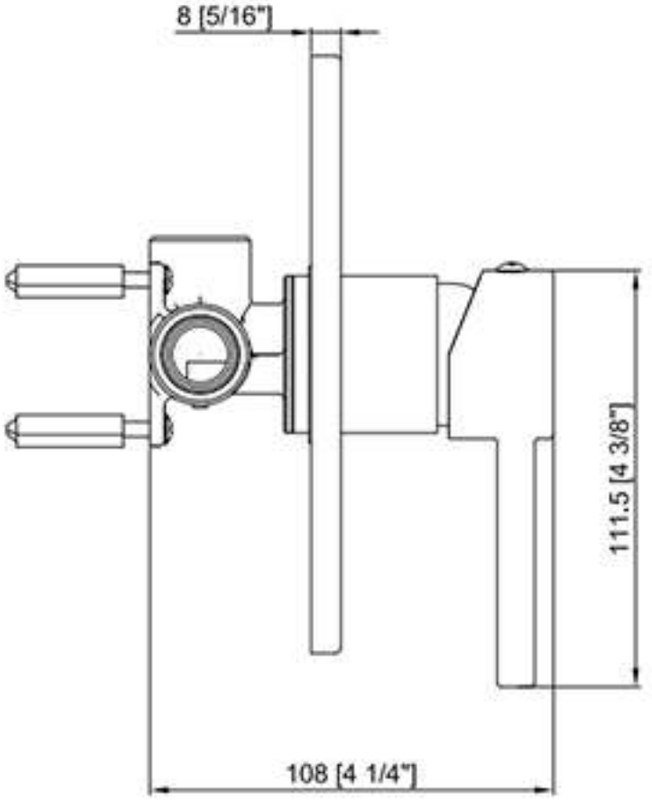
8 [5/16"]
111.5 [4 3/8"]
108 [4 1/4"]