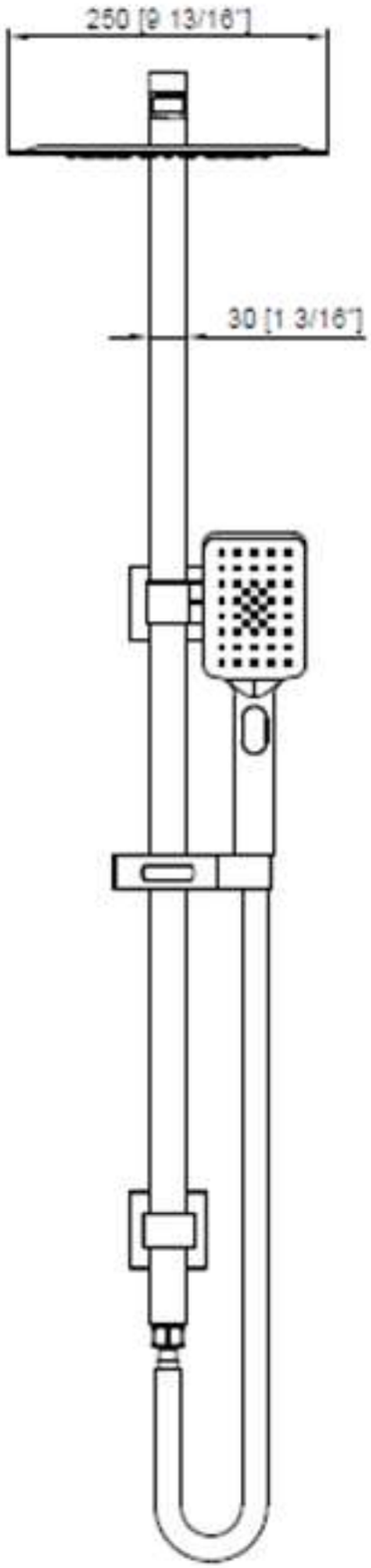
250 [9 13/16"]
30 [1 3/16"]

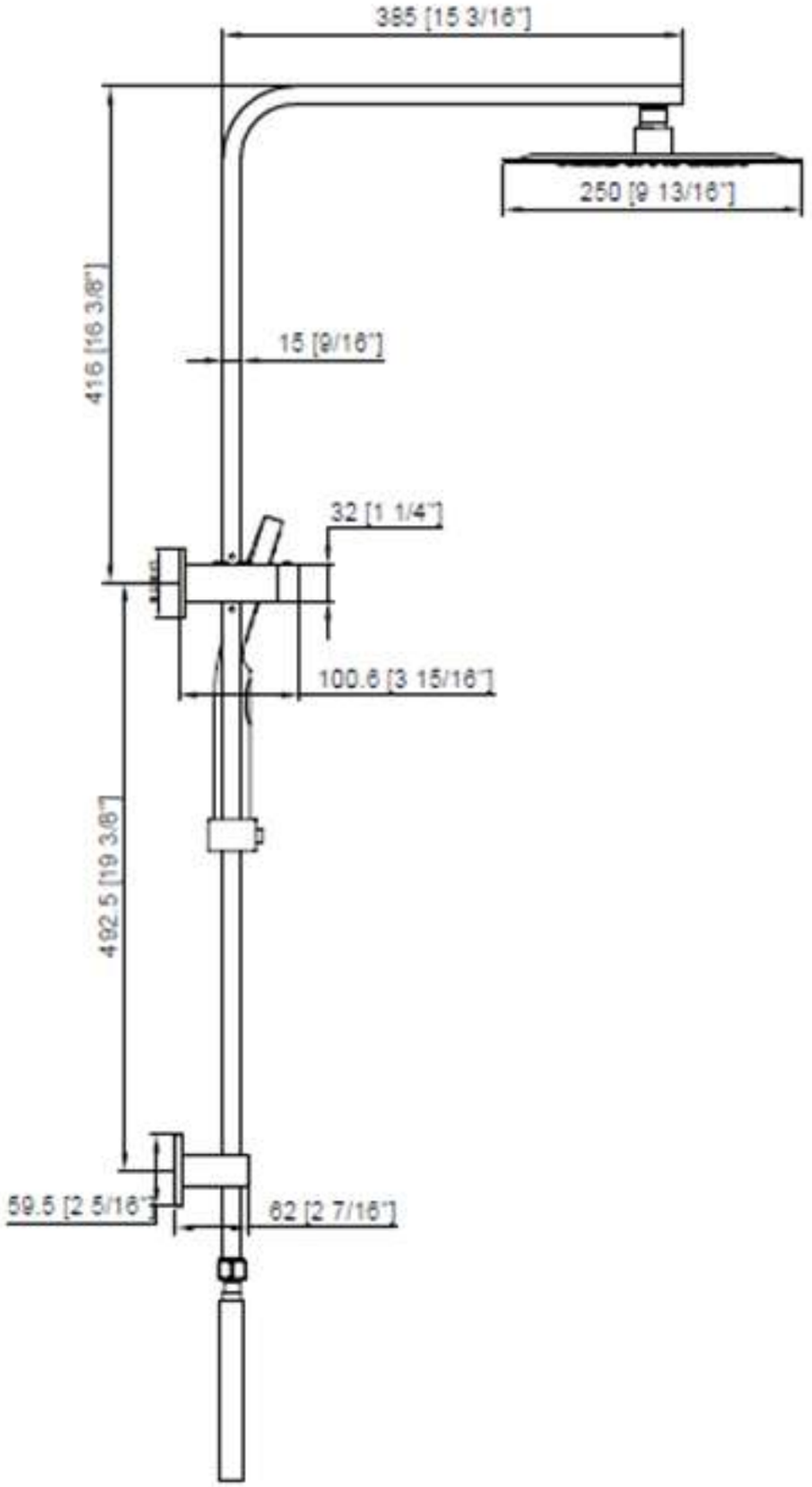
385 [15 3/16"]
250 [9 13/16"]
416 [16 3/8"]
15 [9/16"]
32 [1 1/4"]
100.6 [3 15/16"]
492.5 [19 3/8"]
59.5 [2 5/16"]
62 [2 7/16"]

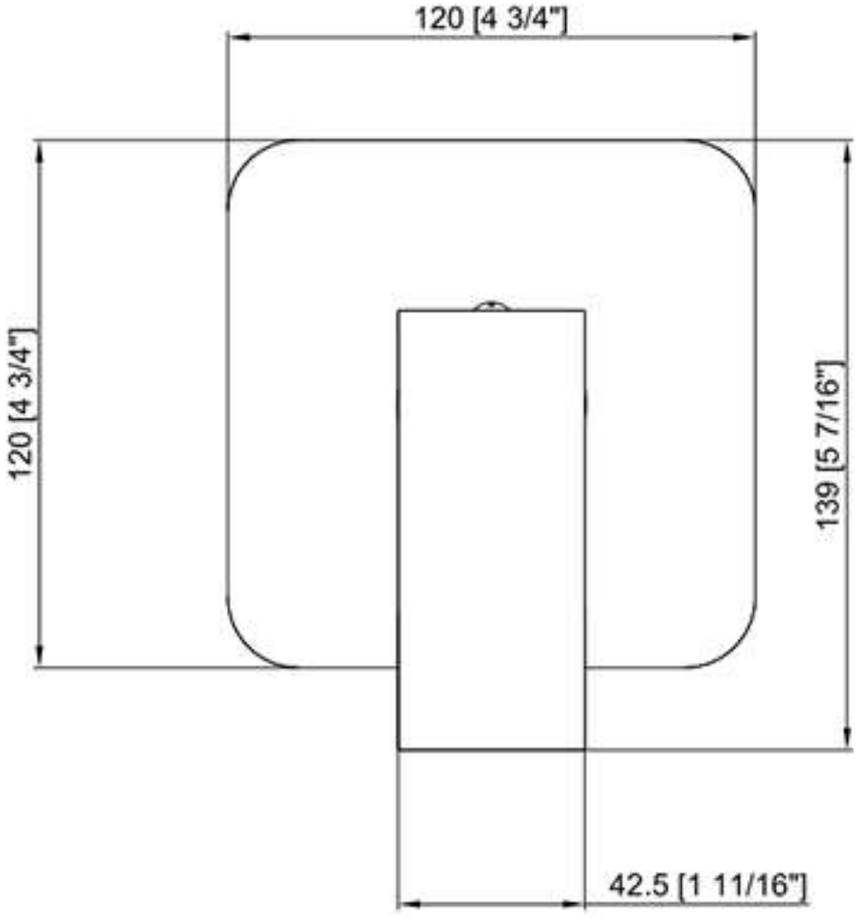
120 [4 3/4"]
120 [4 3/4"]
139 [5 7/16"]
42.5 [1 11/16"]

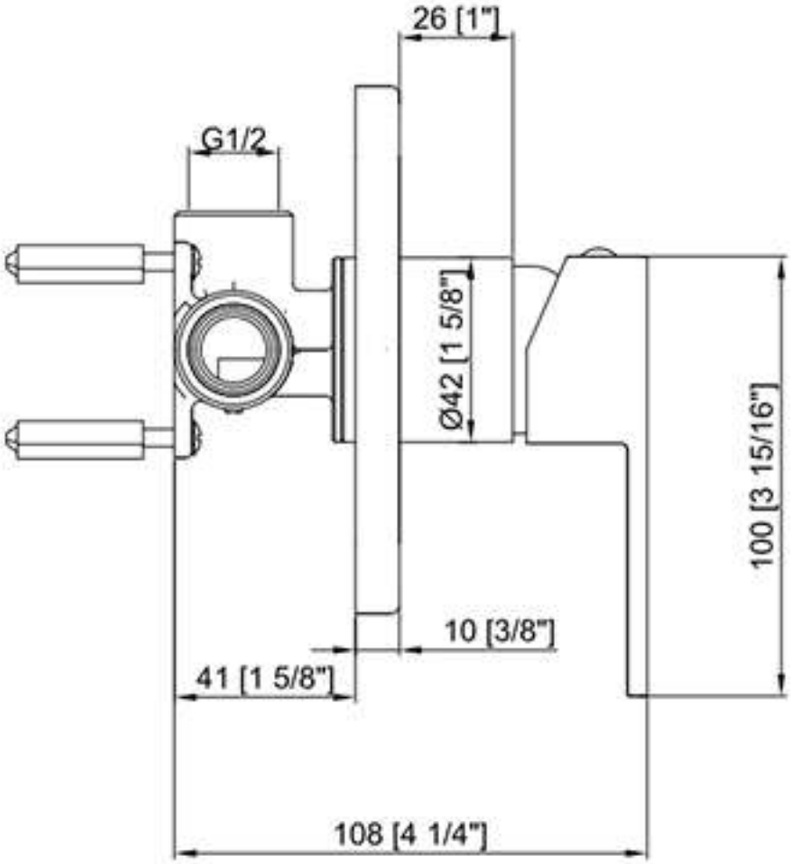
26 [1"]
G1/2
Ø42 [1 5/8"]
100 [3 15/16"]
10 [3/8"]
41 [1 5/8"]
108 [4 1/4"]