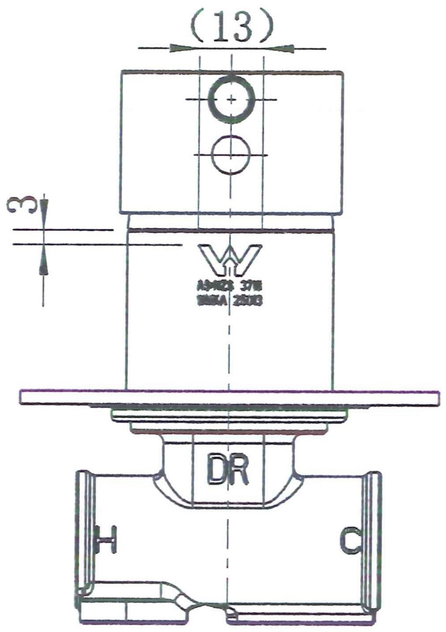
(13)
3
DR
H
C

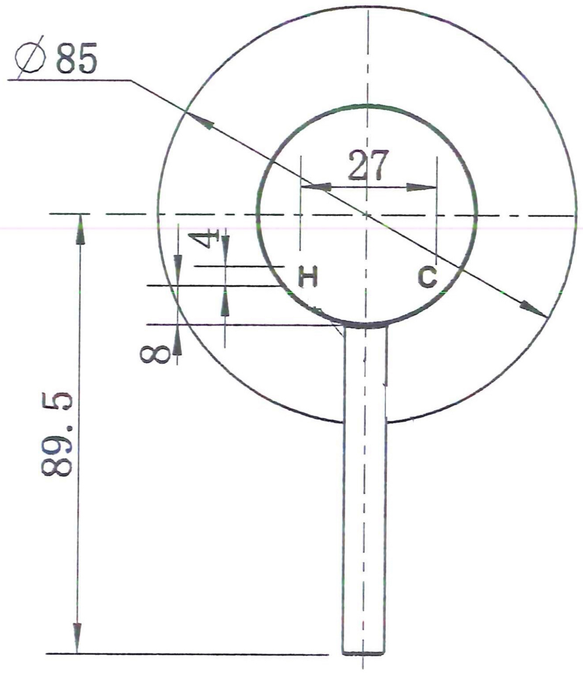
∅85
27
4
8
H
C
89.5

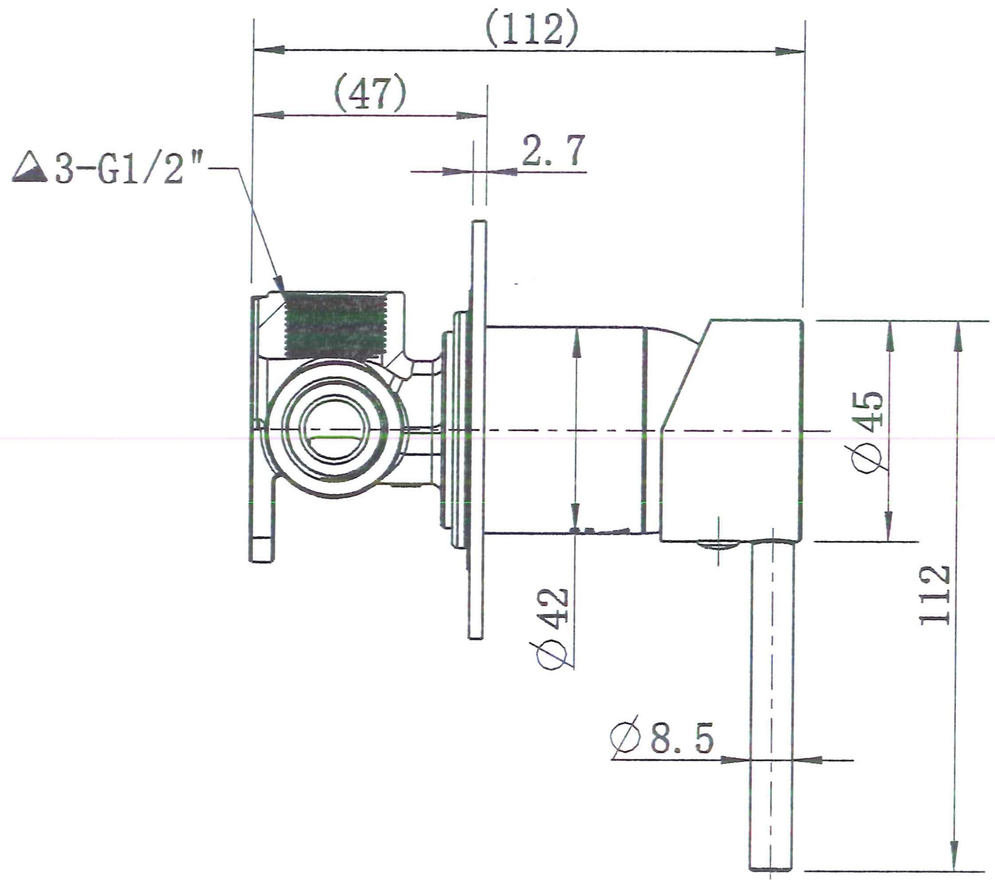
(112)
(47)
2.7
▲3-G1/2"
∅45
∅42
112
∅8.5

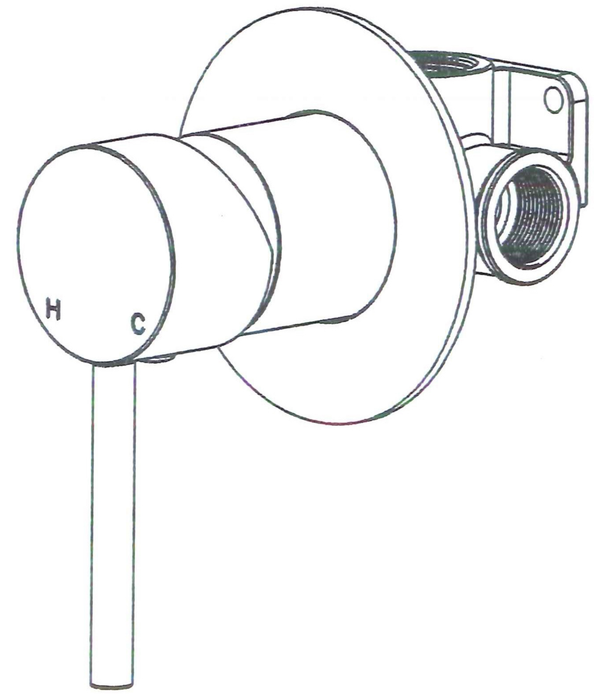
H
C