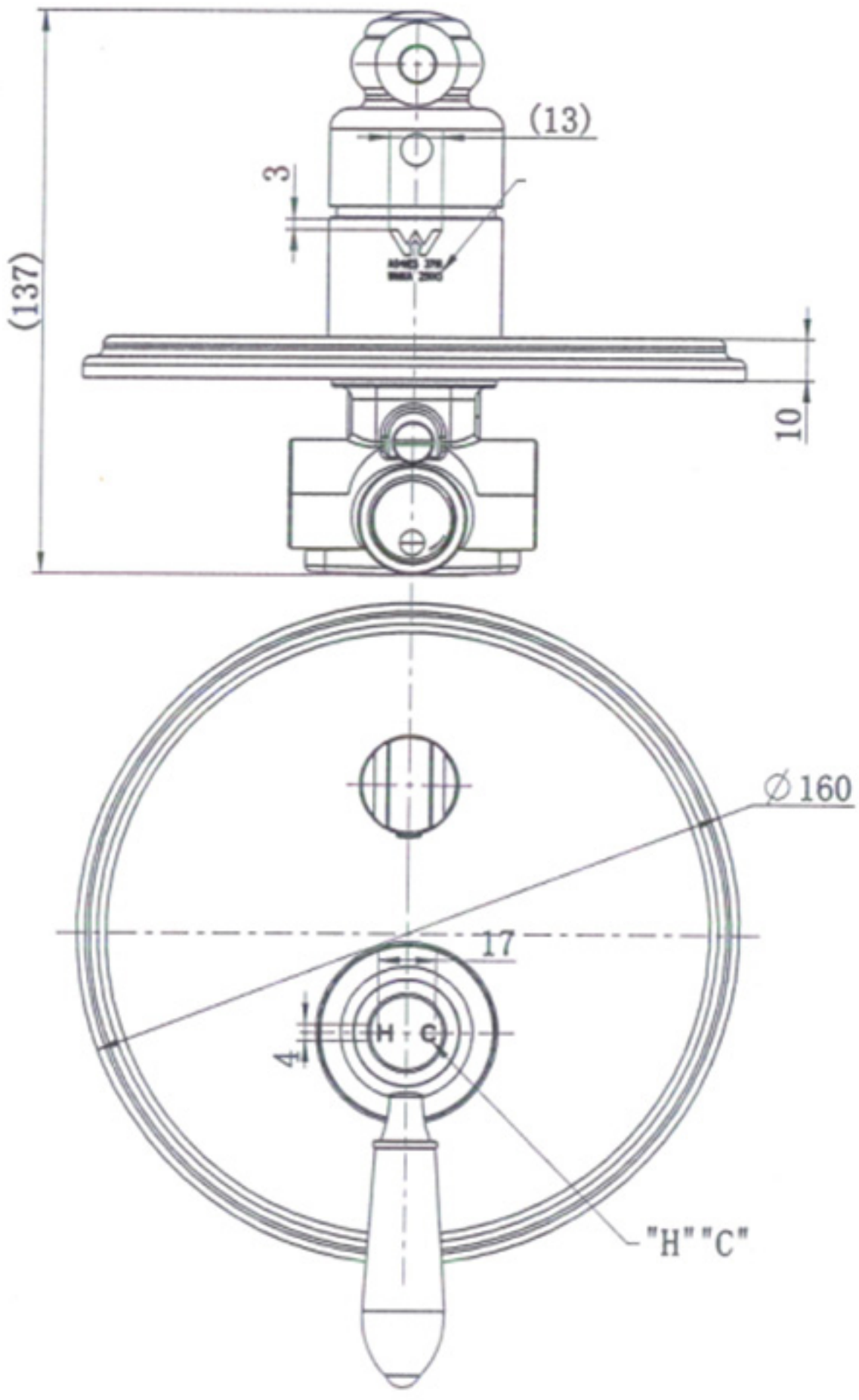
(13)
3
(137)
10
∅160
17
4
H C
"H" "C"

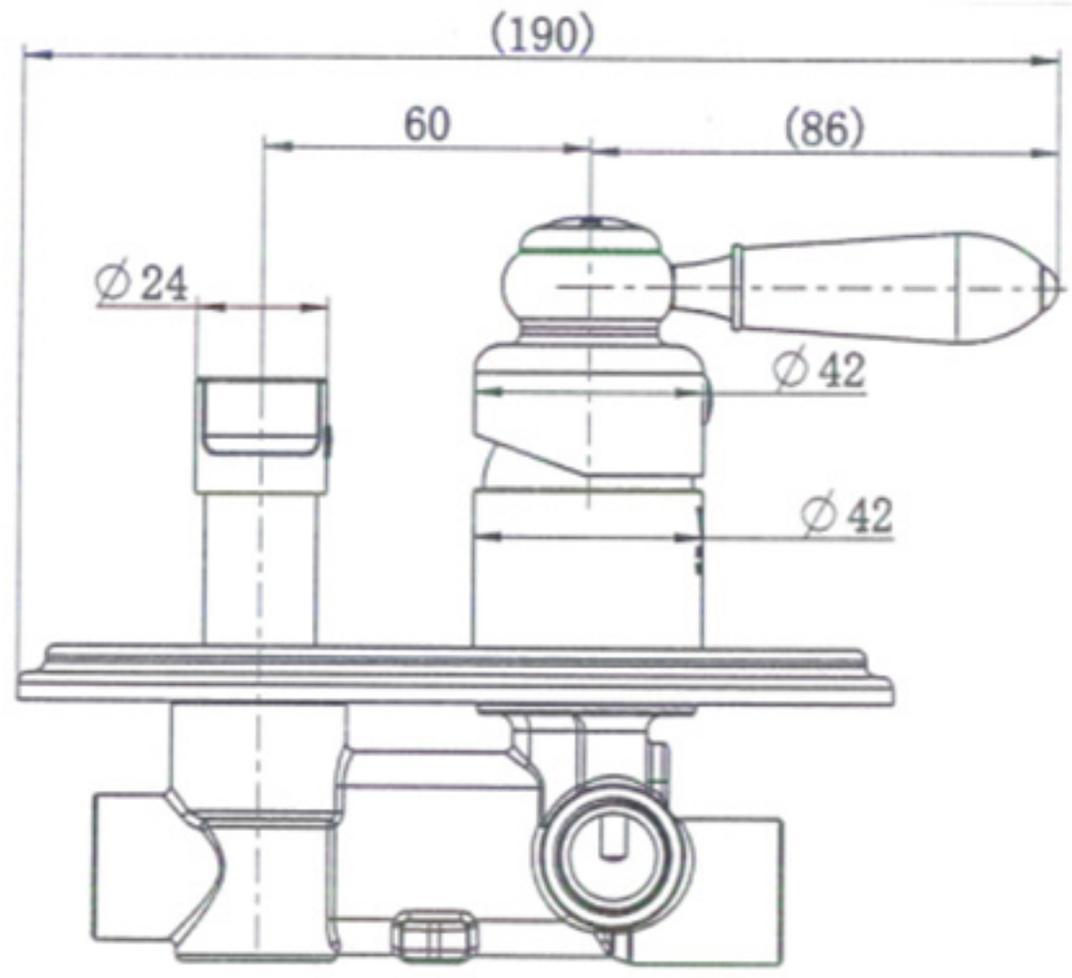
(190)
60
(86)
∅24
∅42
∅42