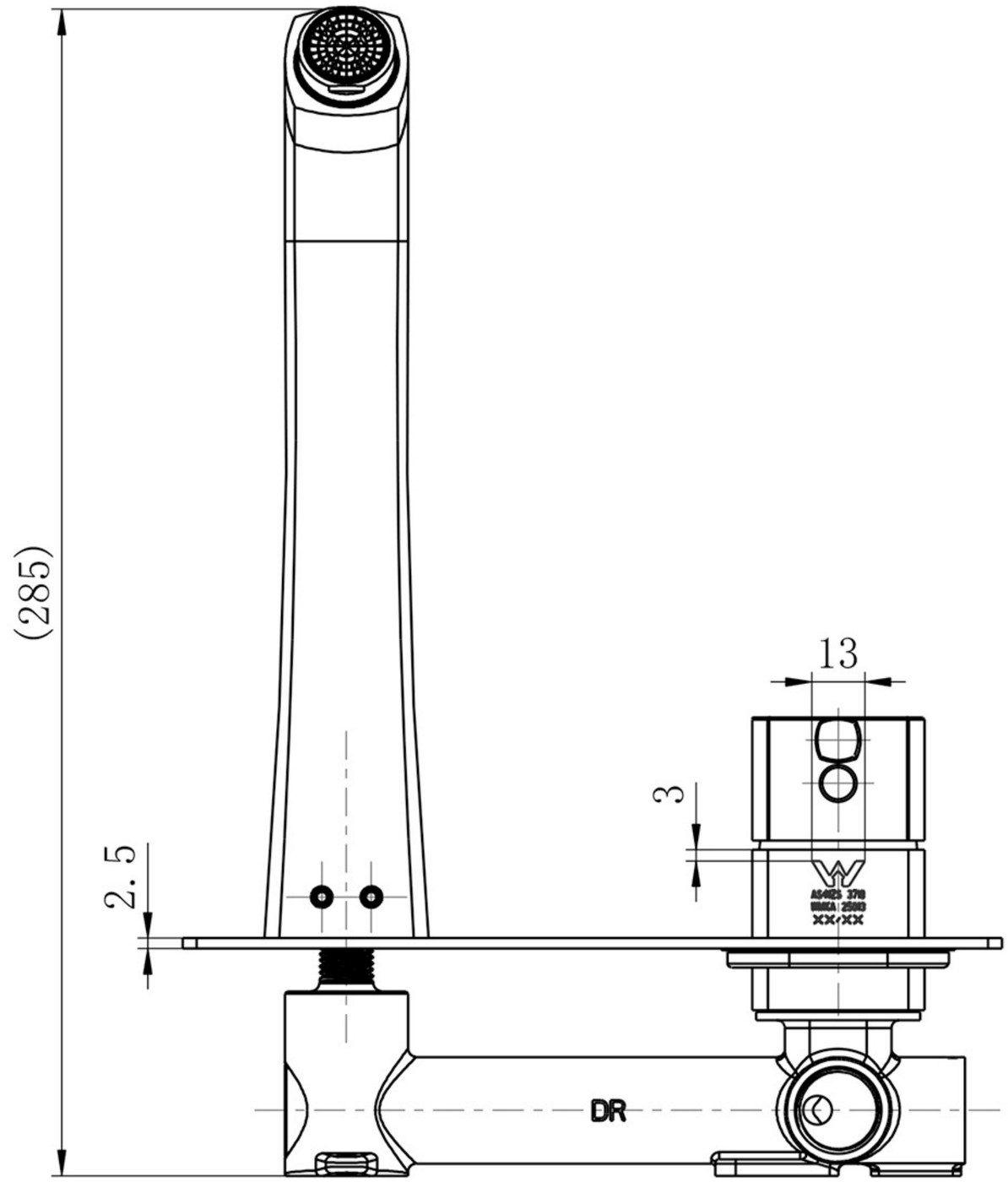
(285)
13
3
2.5
DR

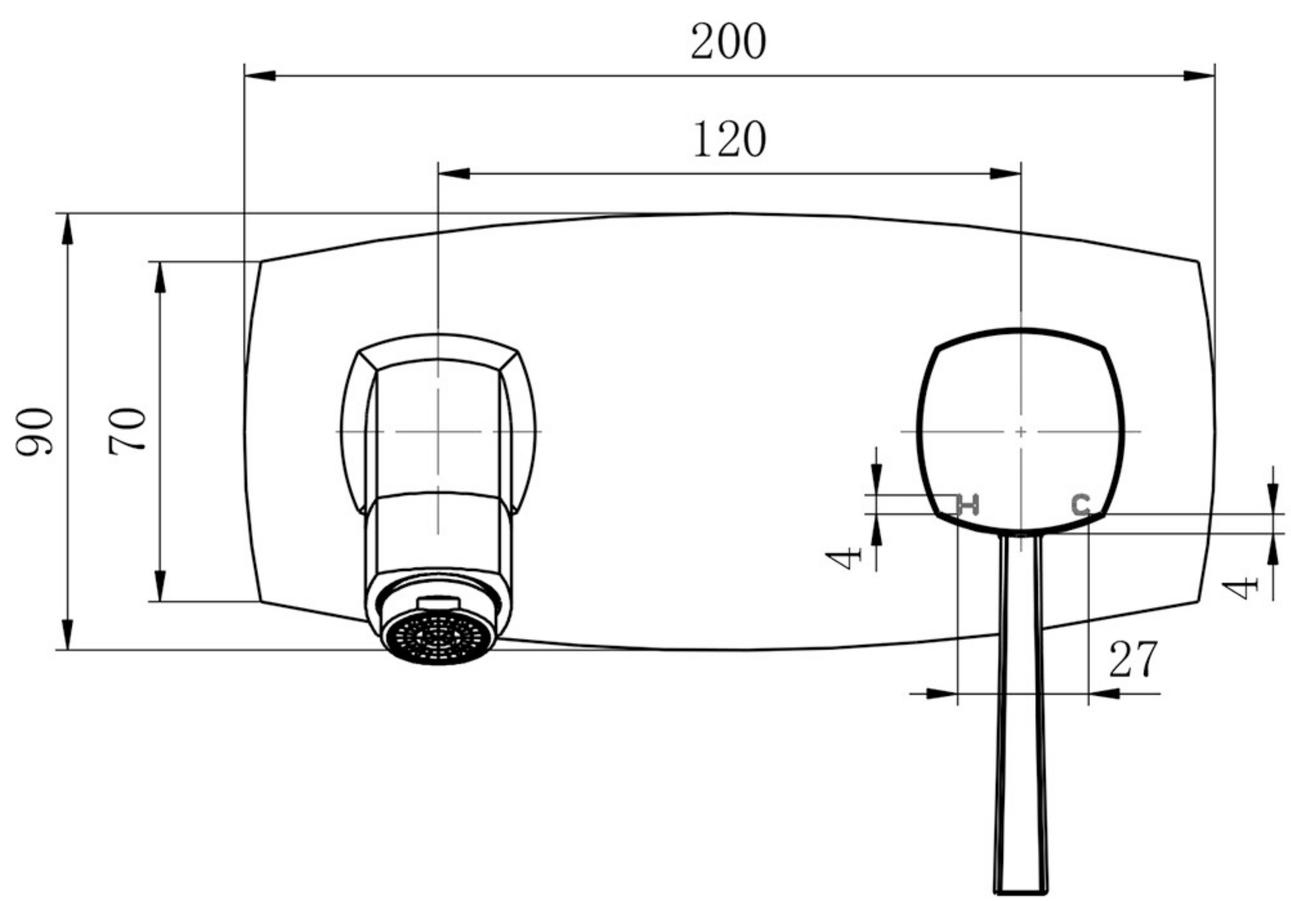
200
120
90
70
4
4
27
H
C