EXTERNAL VIEW

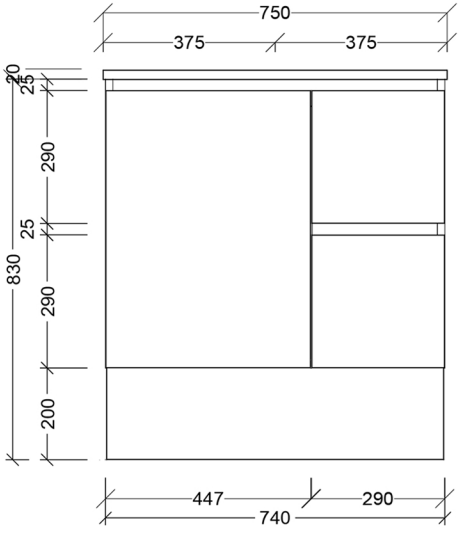

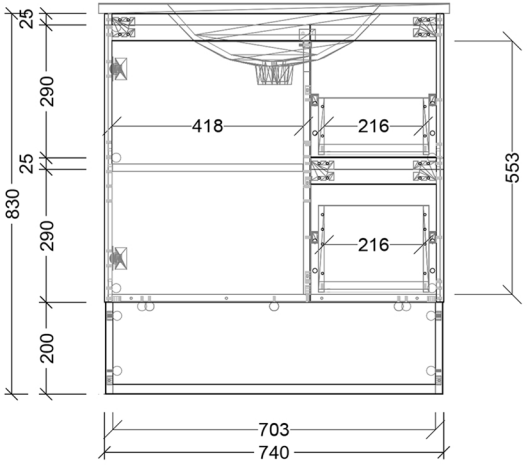

INTERNAL VIEW

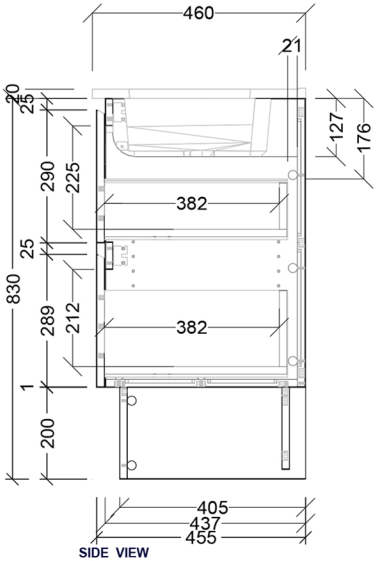

SIDE VIEW