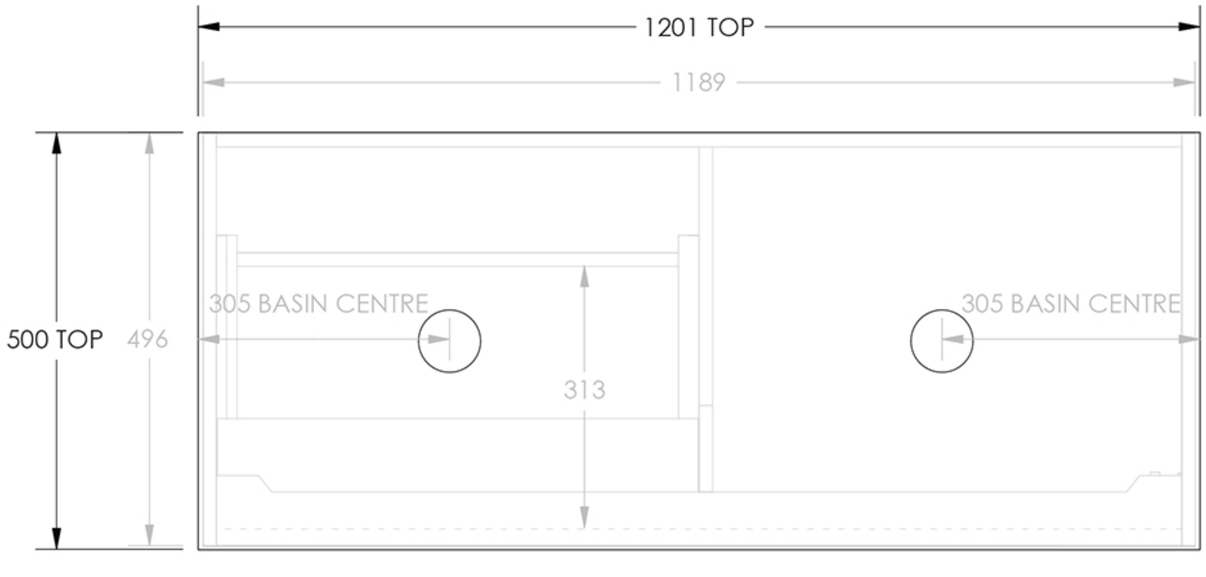
1201 TOP
1189
500 TOP
496
305 BASIN CENTRE
305 BASIN CENTRE
313

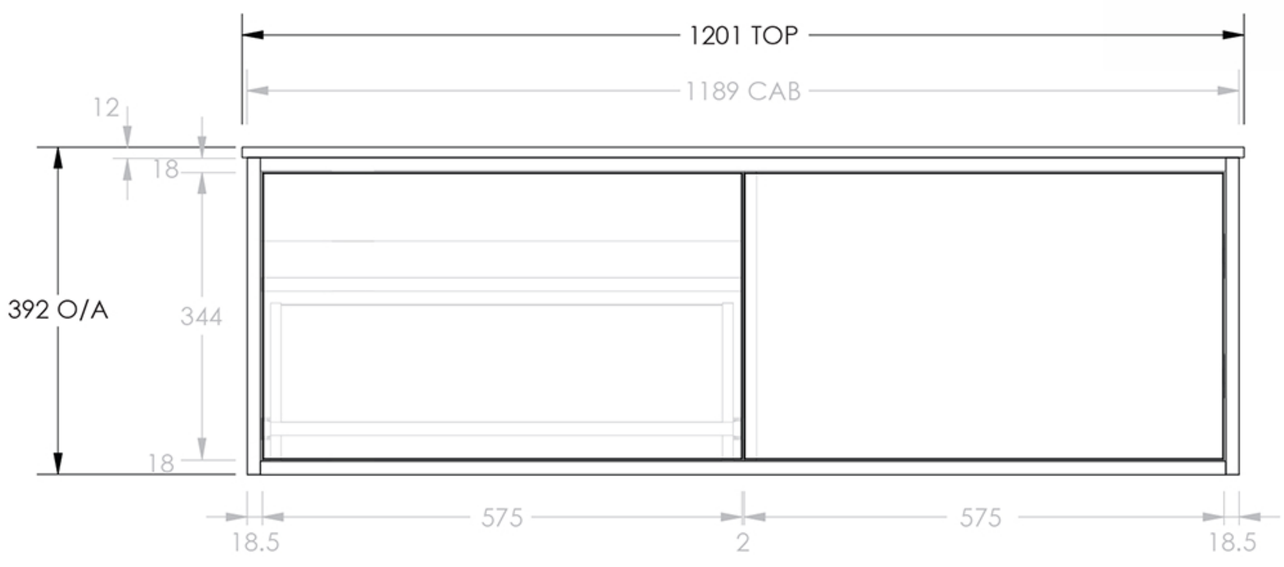
1201 TOP
1189 CAB
12
18
392 O/A
344
18
18.5
575
2
575
18.5

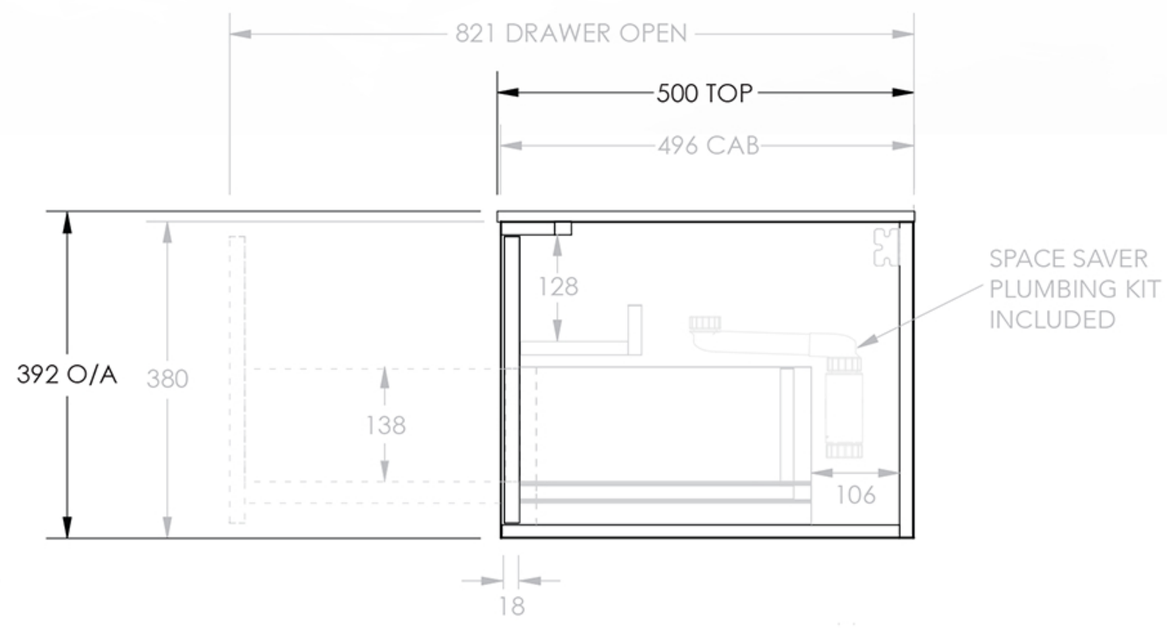
821 DRAWER OPEN
500 TOP
496 CAB
392 O/A
380
138
128
106
SPACE SAVER
PLUMBING KIT
INCLUDED
18