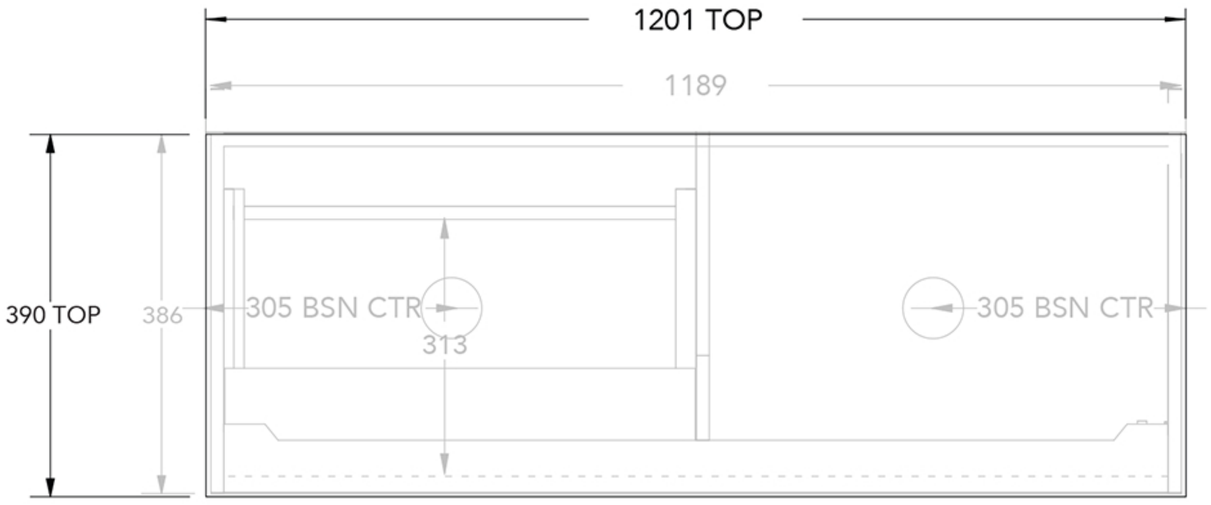
1201 TOP
1189
390 TOP
386
305 BSN CTR
313
305 BSN CTR

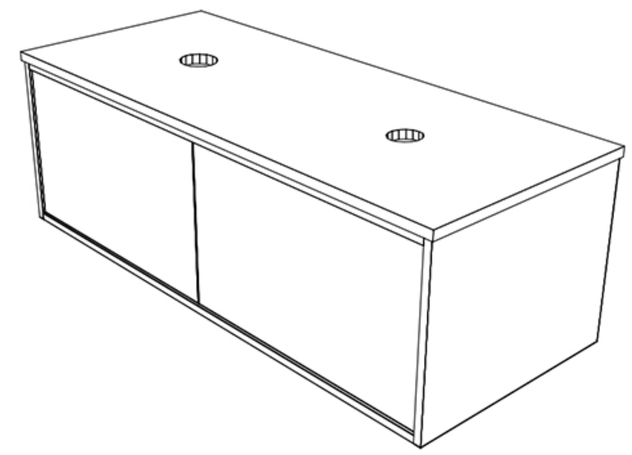

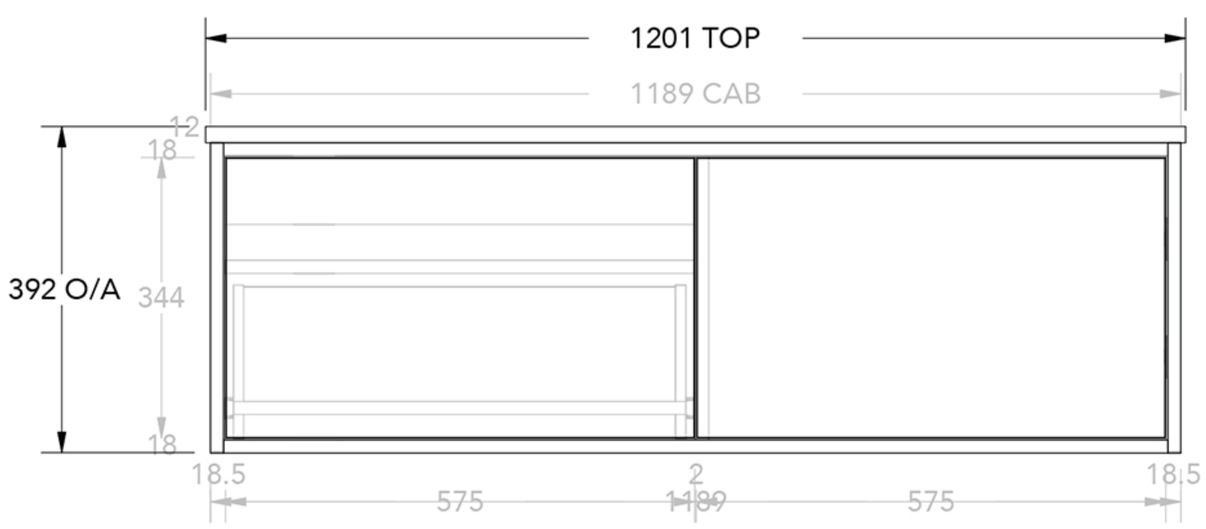
1201 TOP
1189 CAB
12
18
392 O/A
344
18
18.5
2
18.5
575
1189
575

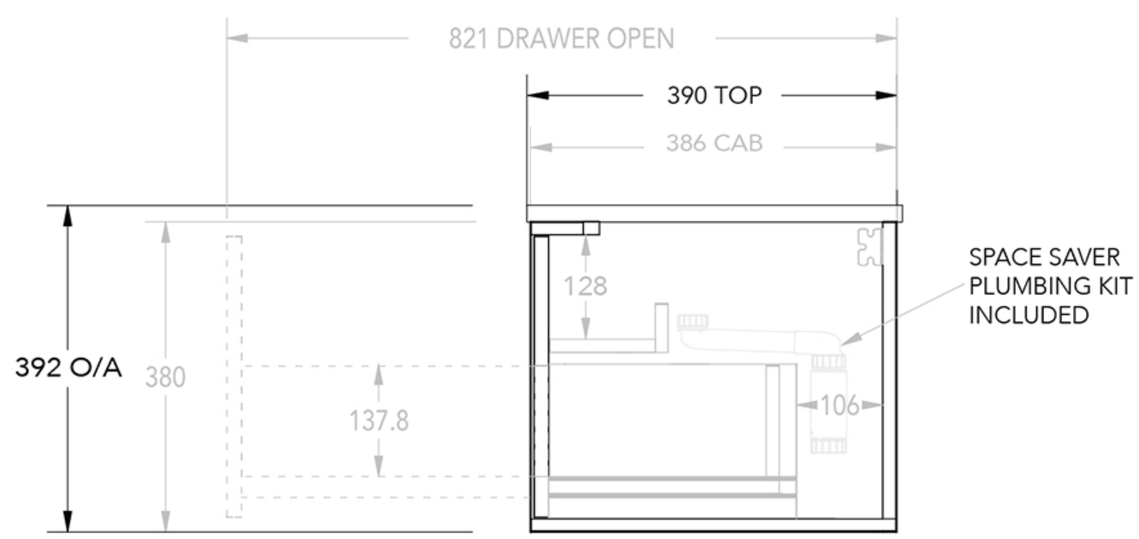
821 DRAWER OPEN
390 TOP
386 CAB
128
SPACE SAVER
PLUMBING KIT
INCLUDED
392 O/A
380
137.8
106