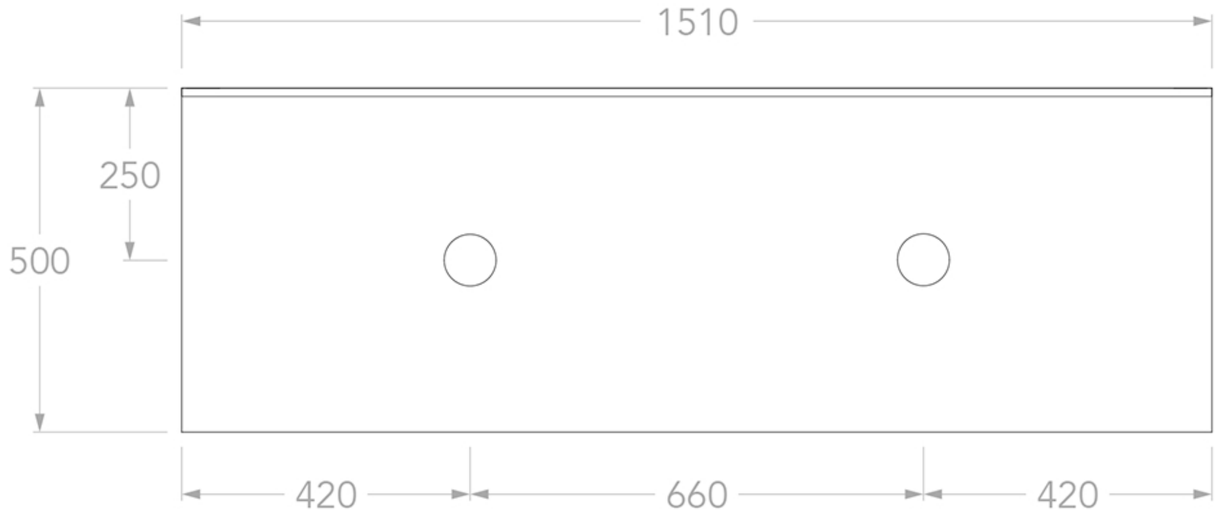
1510
250
500
420
660
420

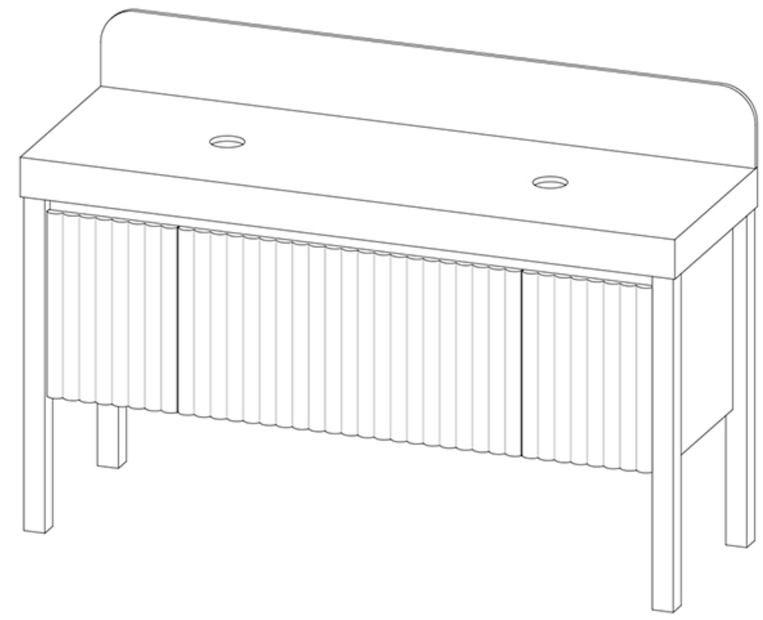

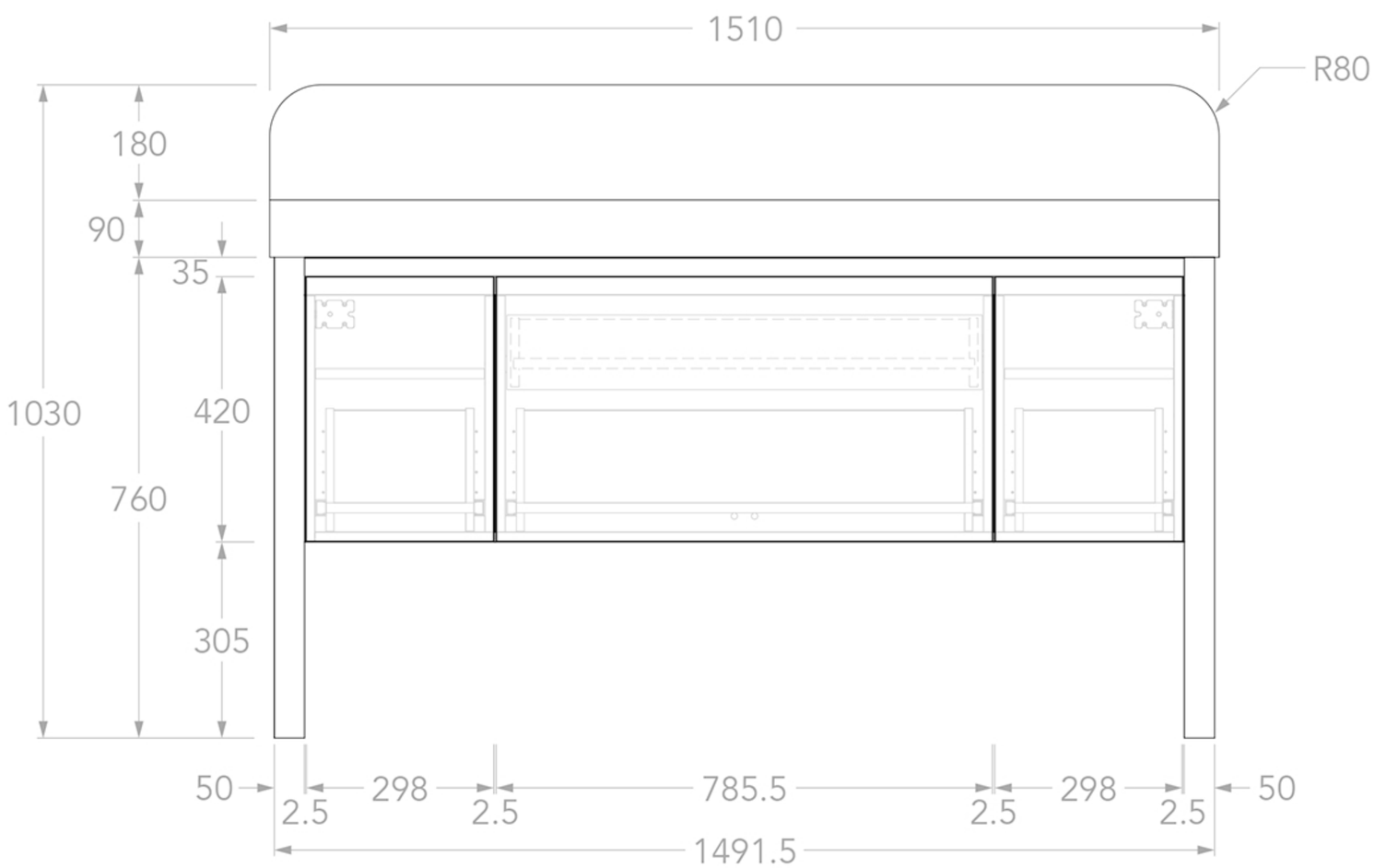
1510
R80
180
90
35
1030
420
760
305
50
2.5
298
2.5
785.5
2.5
298
2.5
50
1491.5

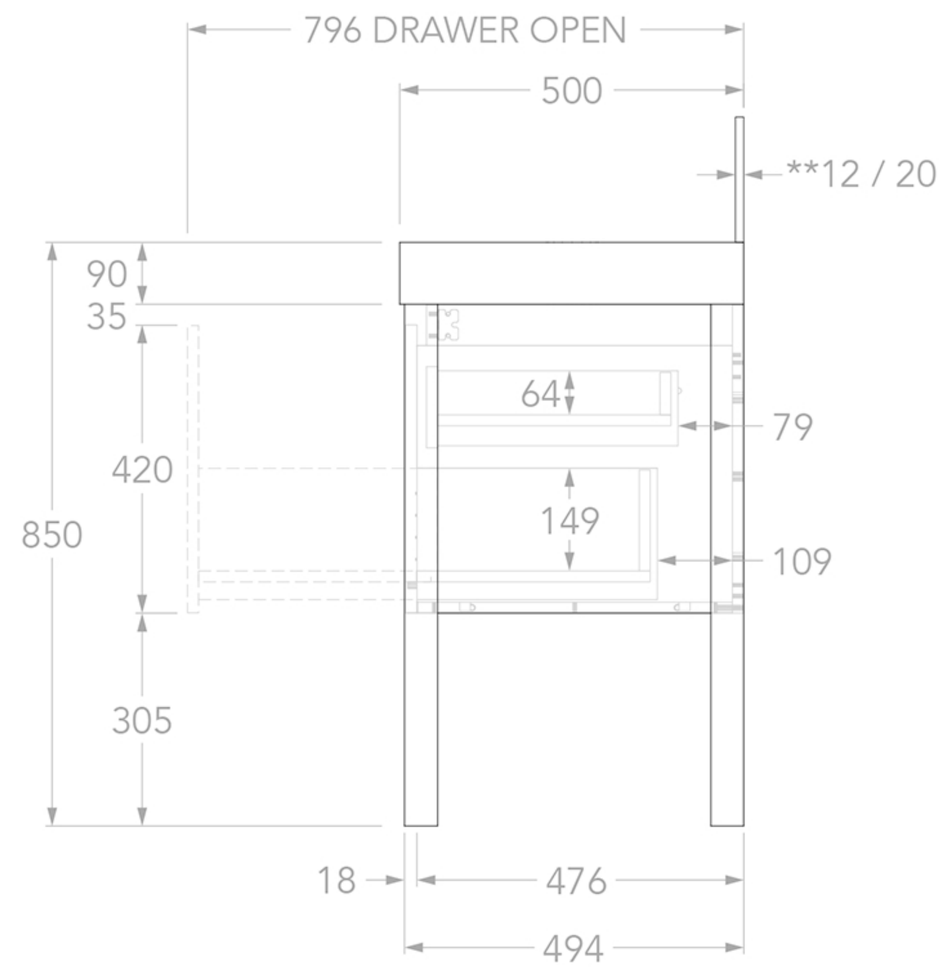
796 DRAWER OPEN
500
**12 / 20
90
35
64
79
420
149
850
109
305
18
476
494