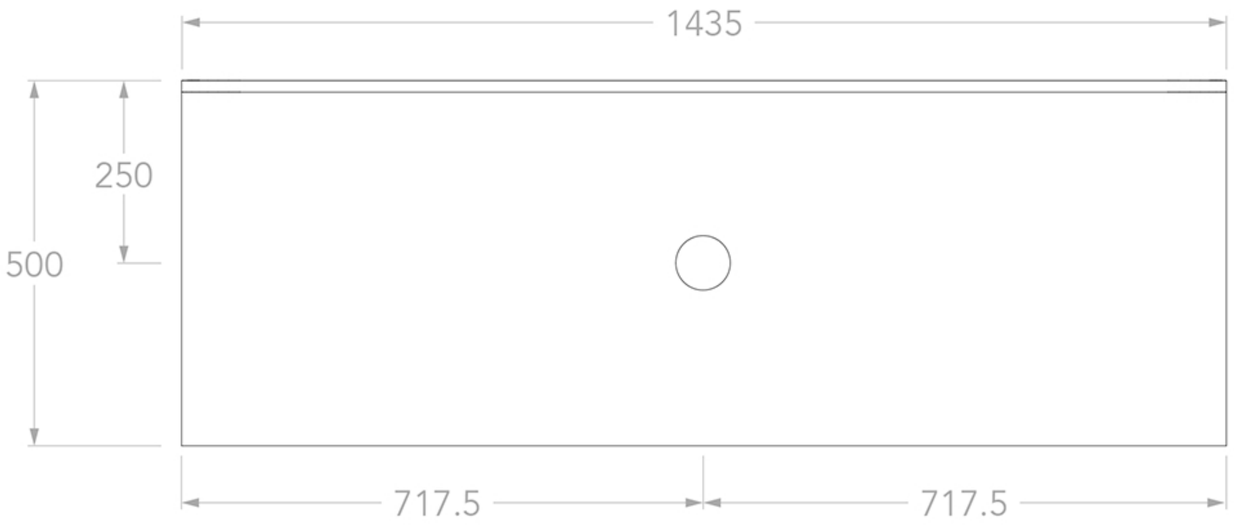
1435
250
500
717.5
717.5

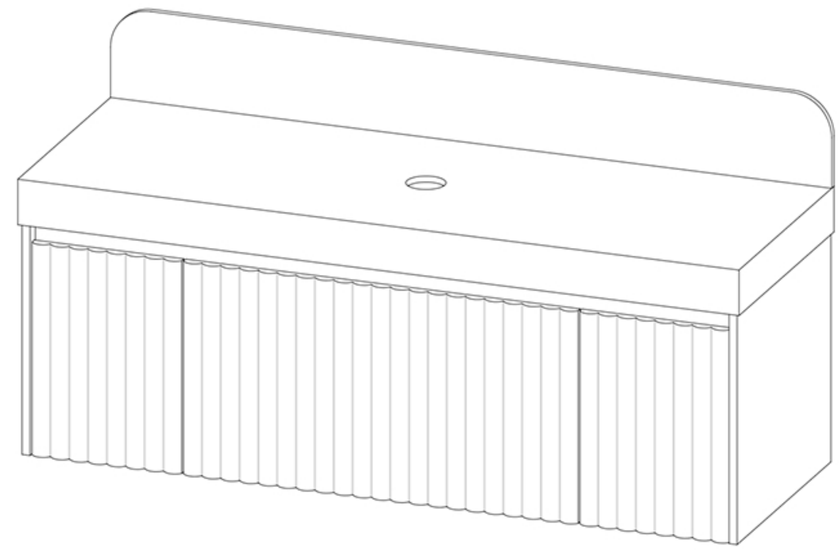

1435
R80
180
90
35
725
455
420
16
1.5
298
2.5
785.5
2.5
298
1.5
16
1389.5

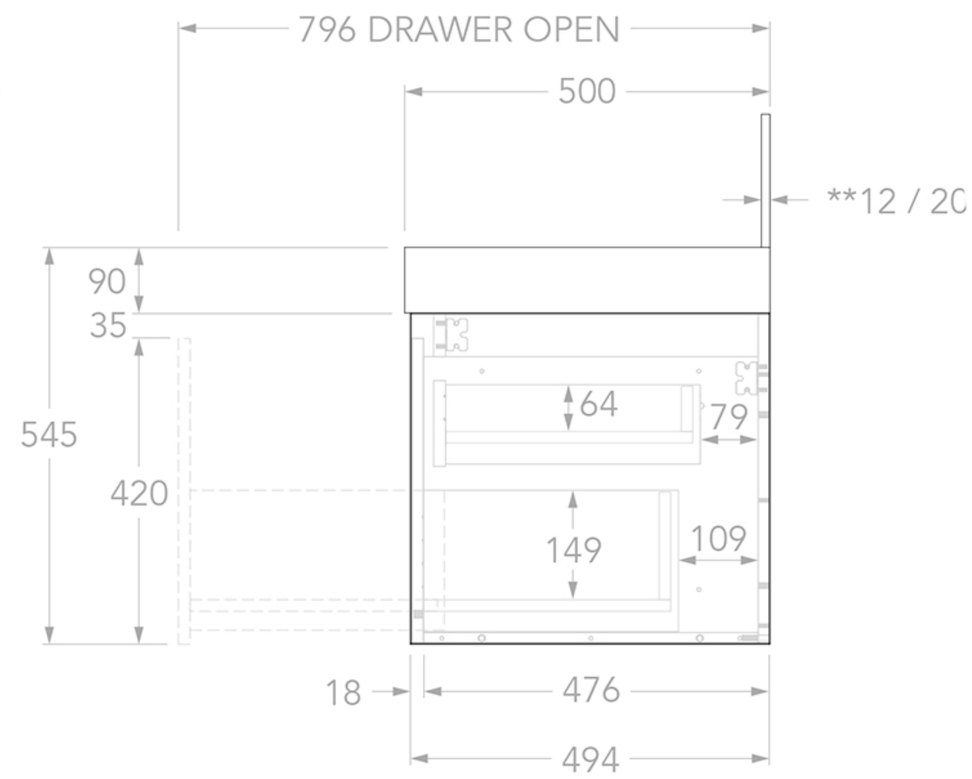
796 DRAWER OPEN
500
**12 / 20
90
35
545
420
64
79
149
109
18
476
494