Installation instructions for corner clothes rack

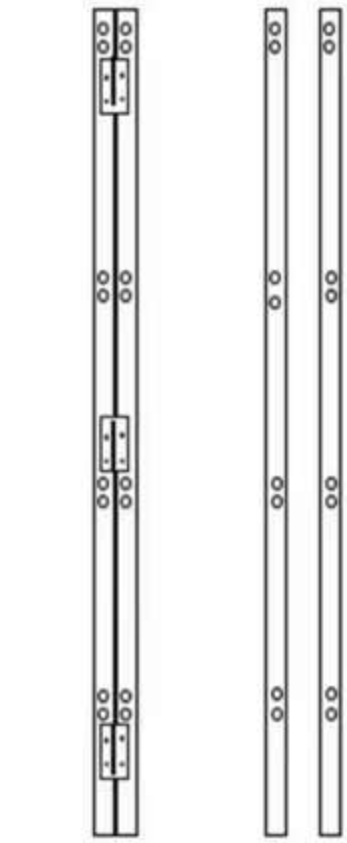

⑤Lotus leaf pillar ⑥Unilateral column

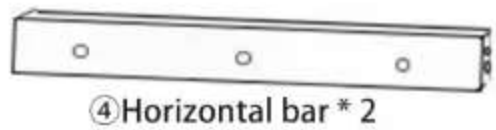

④Horizontal bar * 2

③Horizontal bar * 2

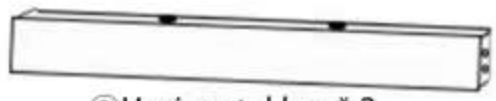

②Horizontal bar * 2

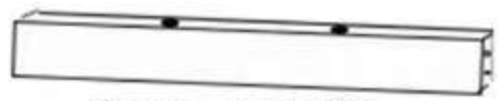

①Horizontal bar * 2

One column, three layers 12 3 4 One each

Two column. three lavers 12 3 4 Two each

⑦hangers

One column, three layers 9 pcs
Two column, three layers 18 pcs

A long screw

⑧Small circular stick
One column - 6 pcs
Two columns - 12 pcs

B short screw

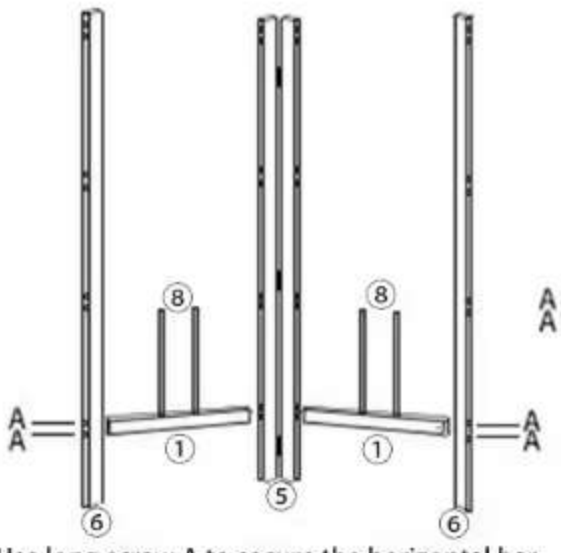

Use long screw A to secure the horizontal bar ① Fixed on columns ⑤ and ⑥

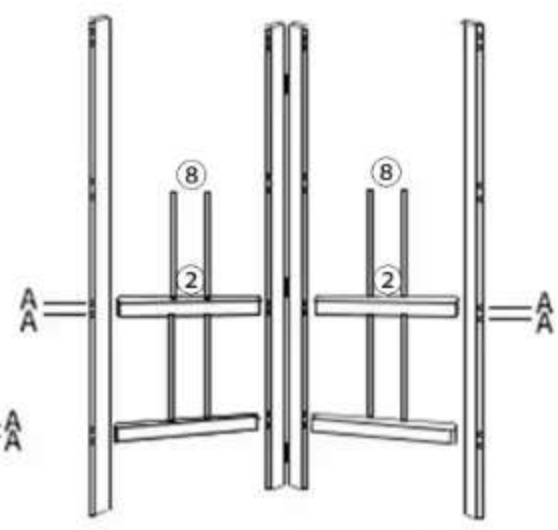

After installing the first layer, insert the small round rod ⑧ into the side hole of the horizontal bar and install it according to the serial number

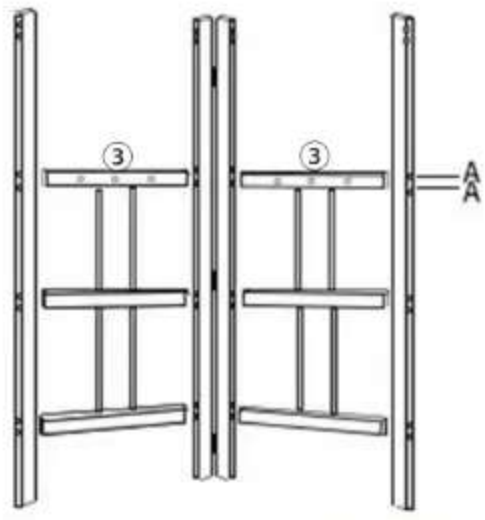

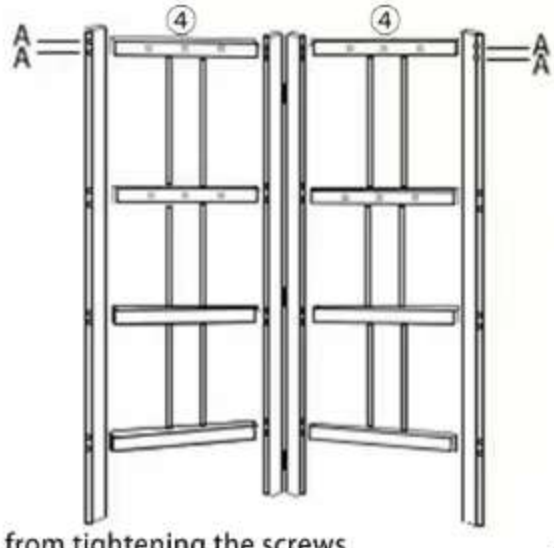

During installation, refrain from tightening the screws individually; instead, gradually tighten them only after the rack is installed.

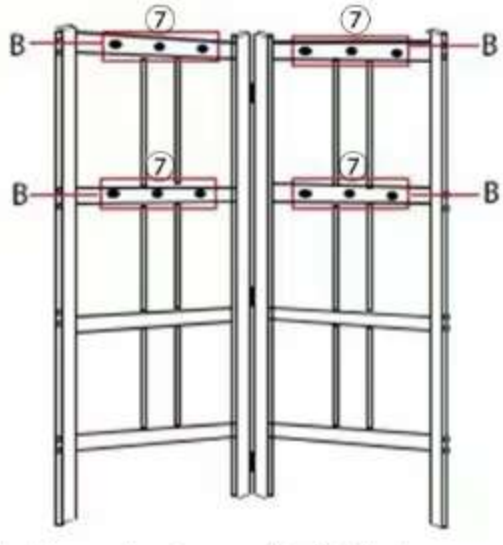

Finally, use short screw B to fix the hangers 7 to the horizontal bar ③ ④