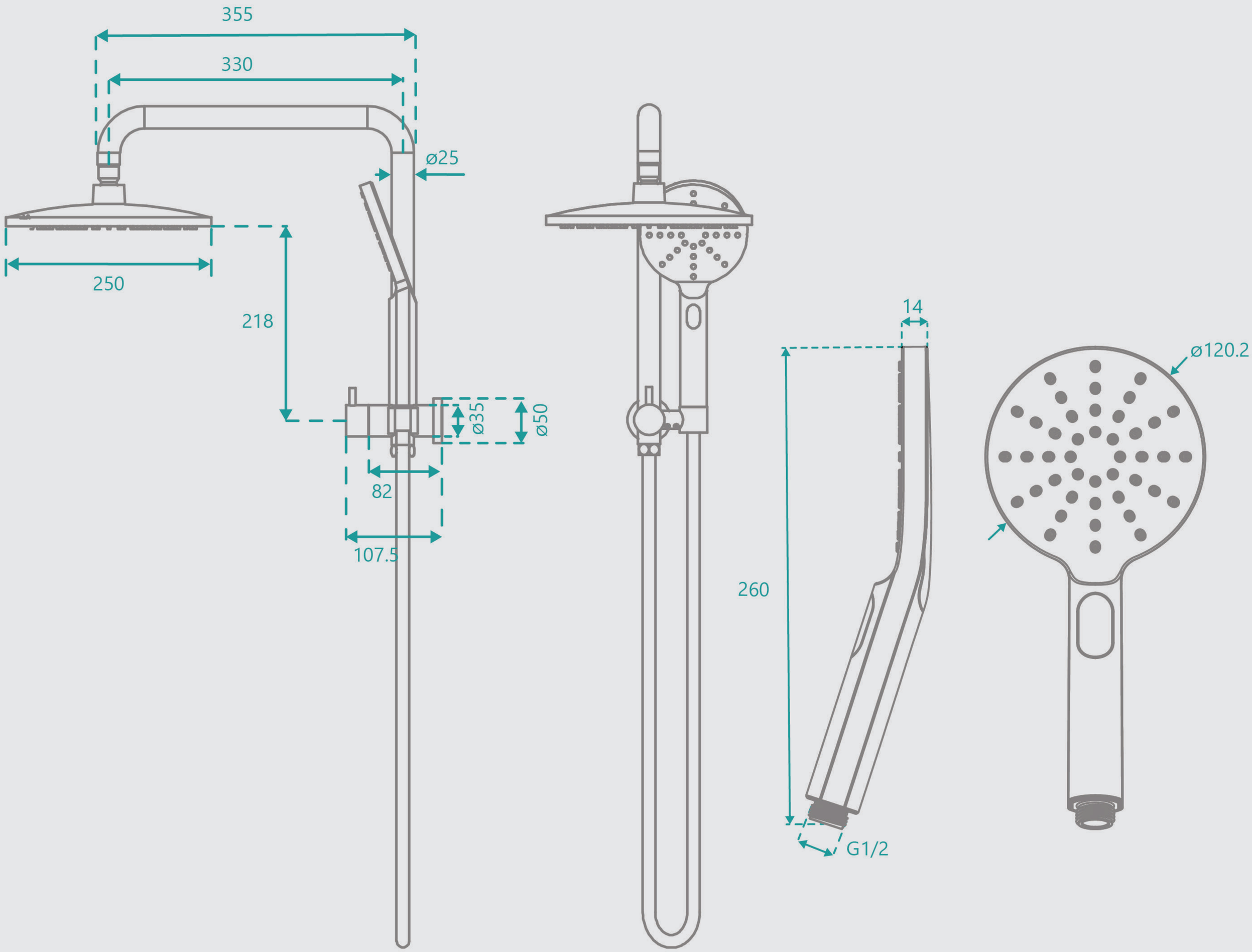


mm

IMPORTANT: Product design specifications are subject to change without notice and may vary from those shown.