BelBagno
bella bagni e' vita bella

Disegno Italiano
www.belbagno.com.au

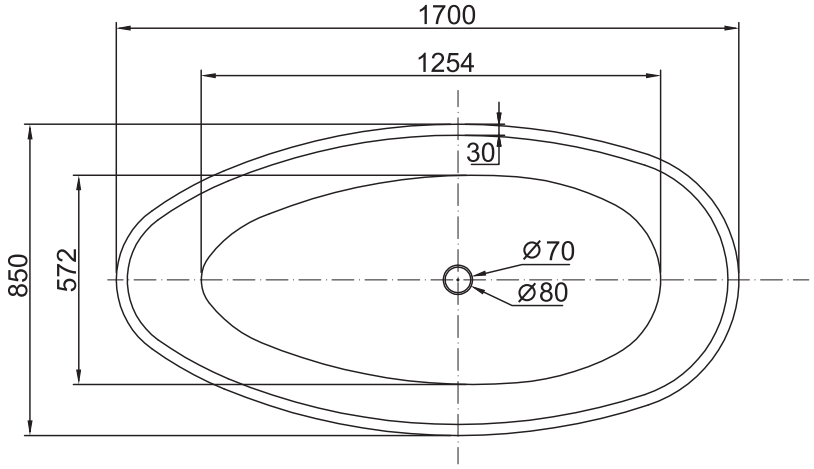

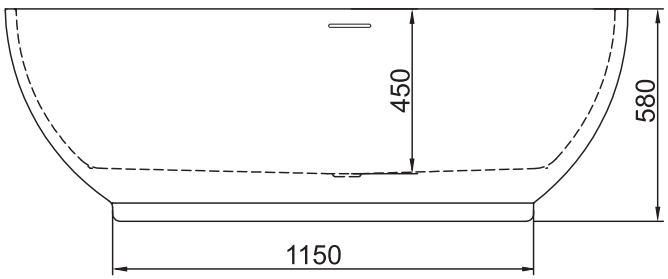

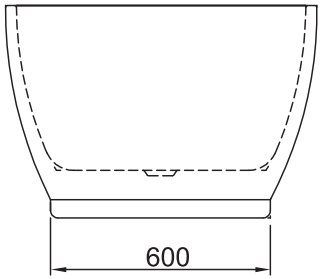

AVEO BATH

1700x850x580

BelBagno Code

BB1740

LIGHT | SANITARY GRADE ACRYLIC | ADJUSTABLE LEGS | FREESTANDING | CHROME WASTE INCLUDED

285L Capacity

46KG Bath weight

5 YEARS WARRANTY

All dimensions are in millimetres, are subject to normal manufacturing variances & are subject to change without notice. May 2021.