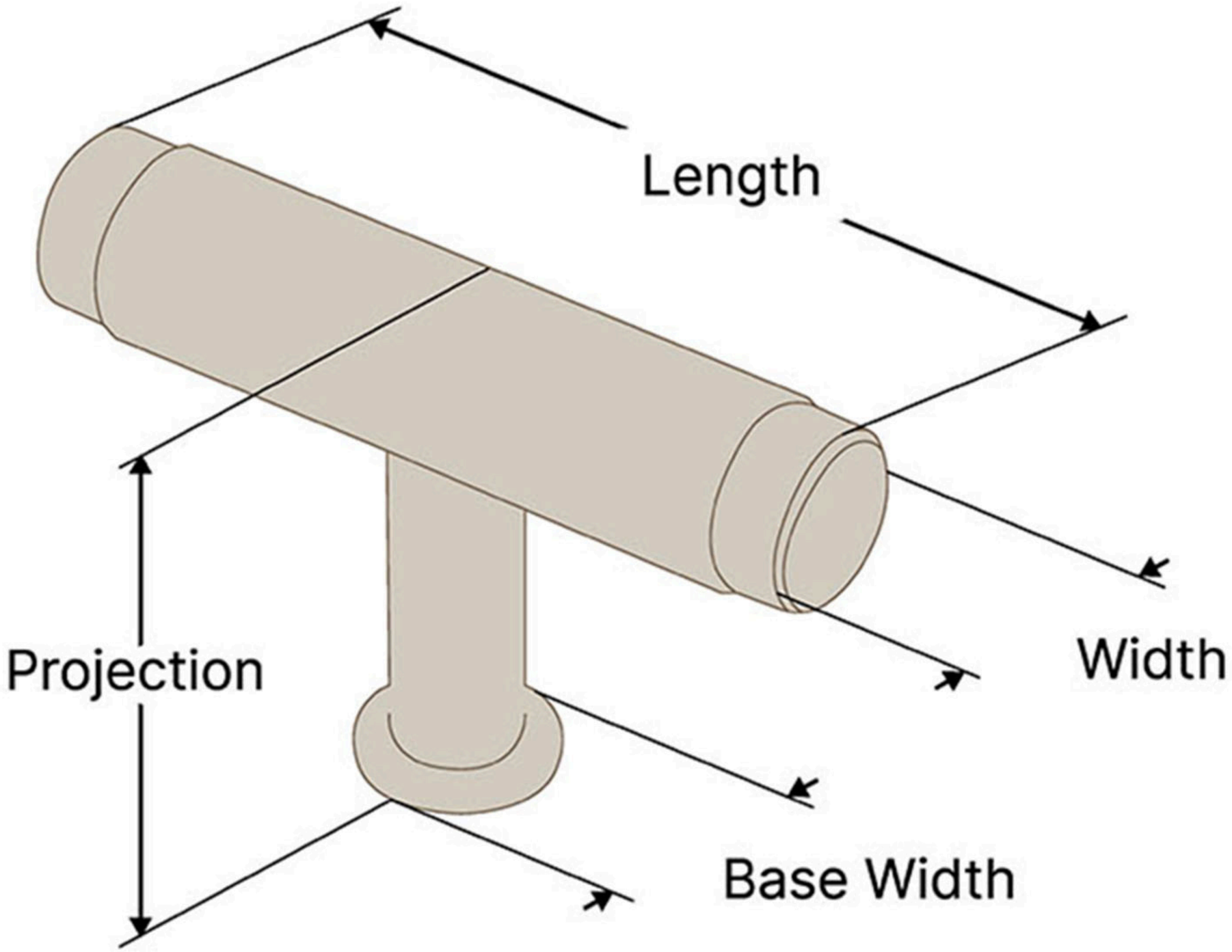

GROVE T-BAR HANDLE

L	W	BW	P
50mm	12mm	12mm	33mm