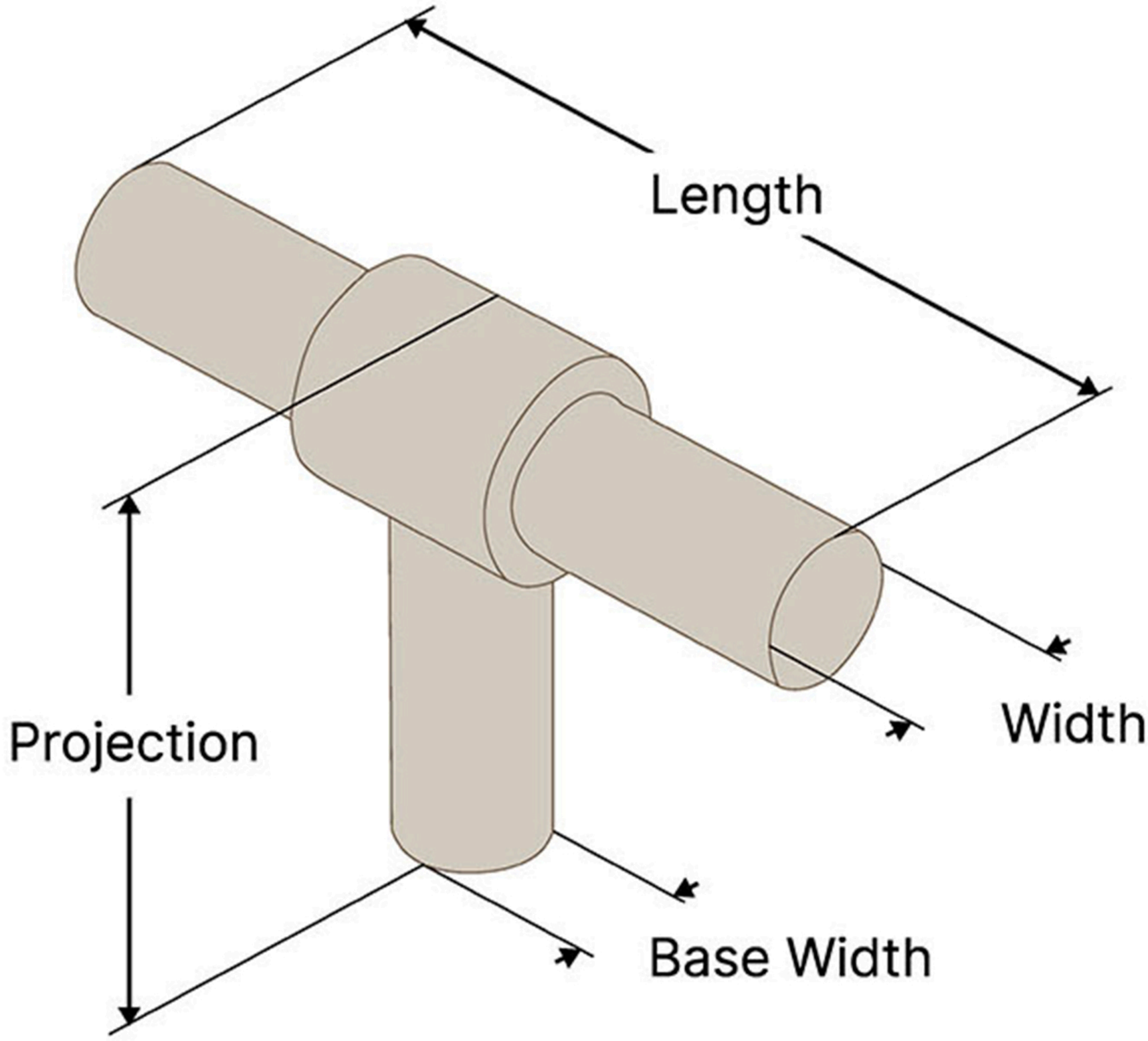

COAST T-BAR HANDLE

L	W	BW	P
50mm	13mm	10mm	32mm