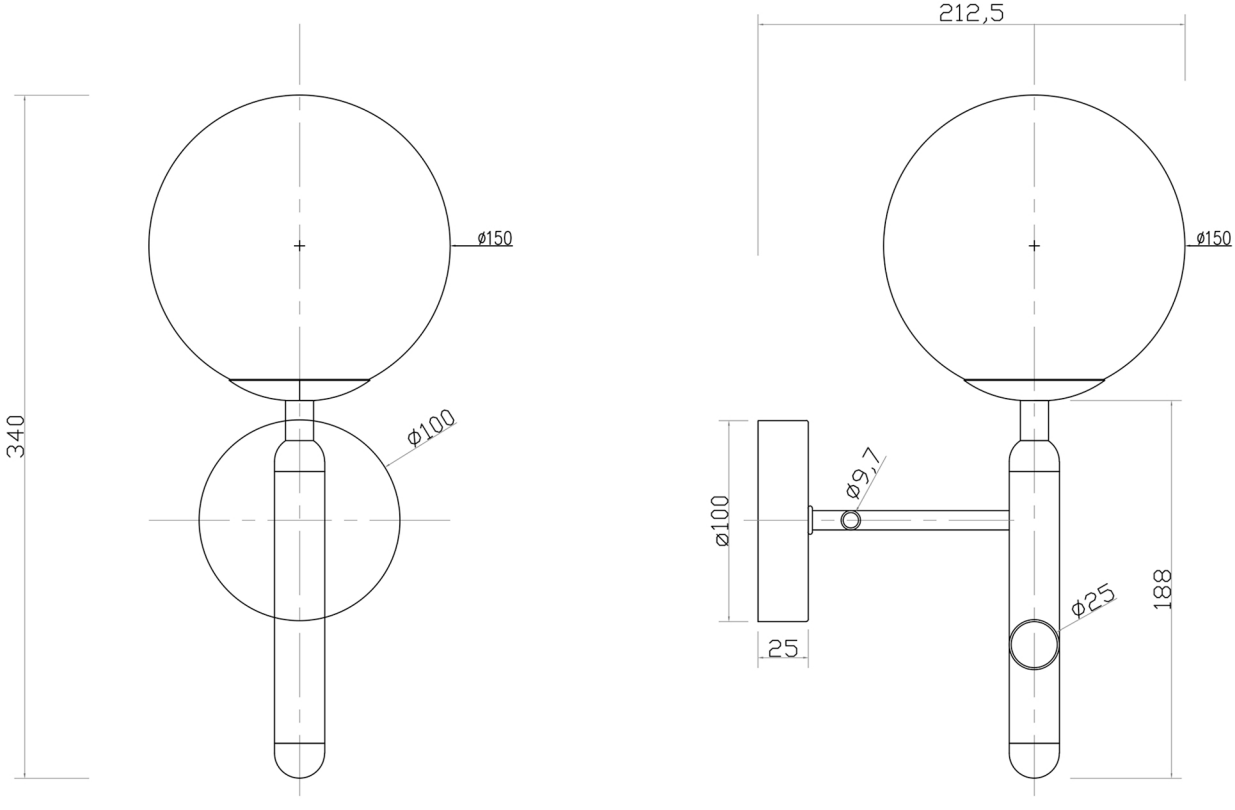

unit: mm