ASSEMBLY INSTRUCTION

No.	Hardware	Q'ty
A	7x90x15	8 Pcs
B	M8x50x15	6 Pcs
		2 Pcs

Step 1

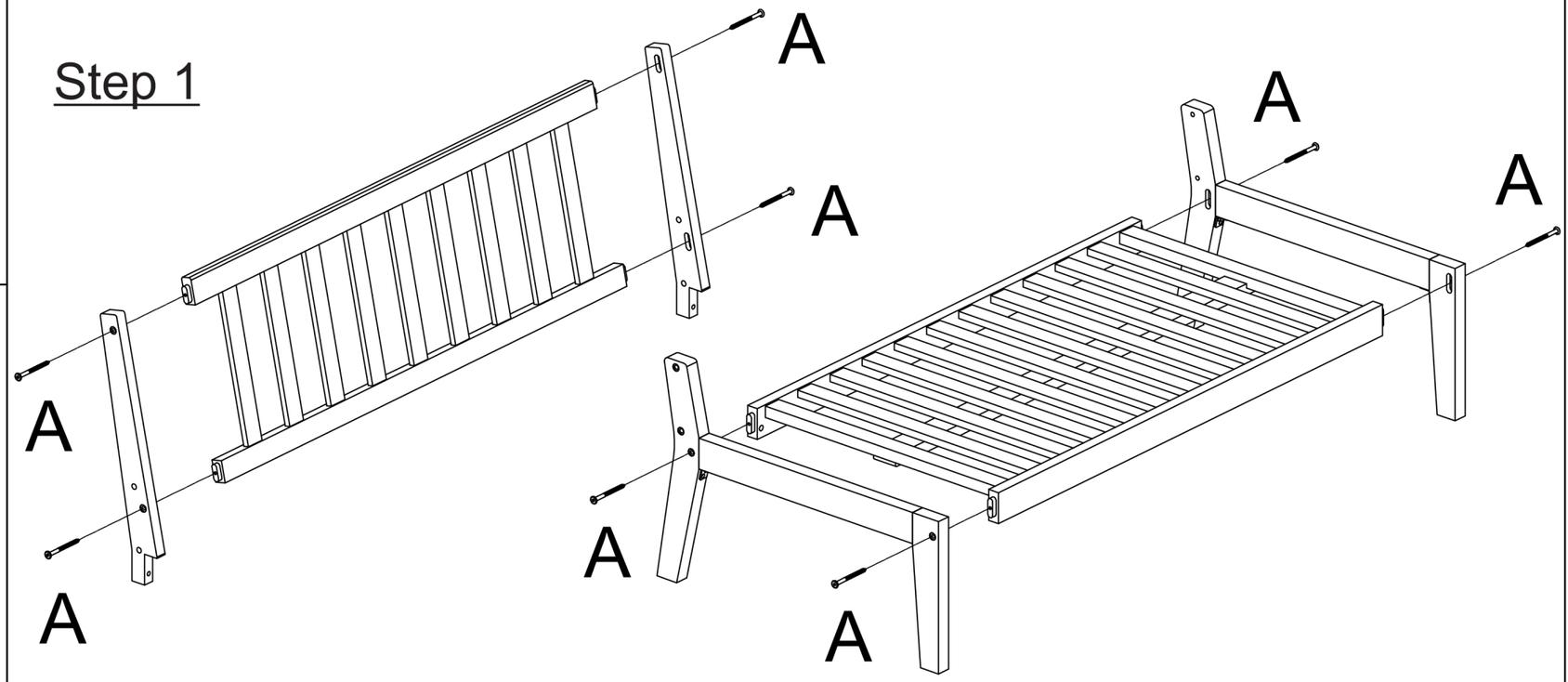
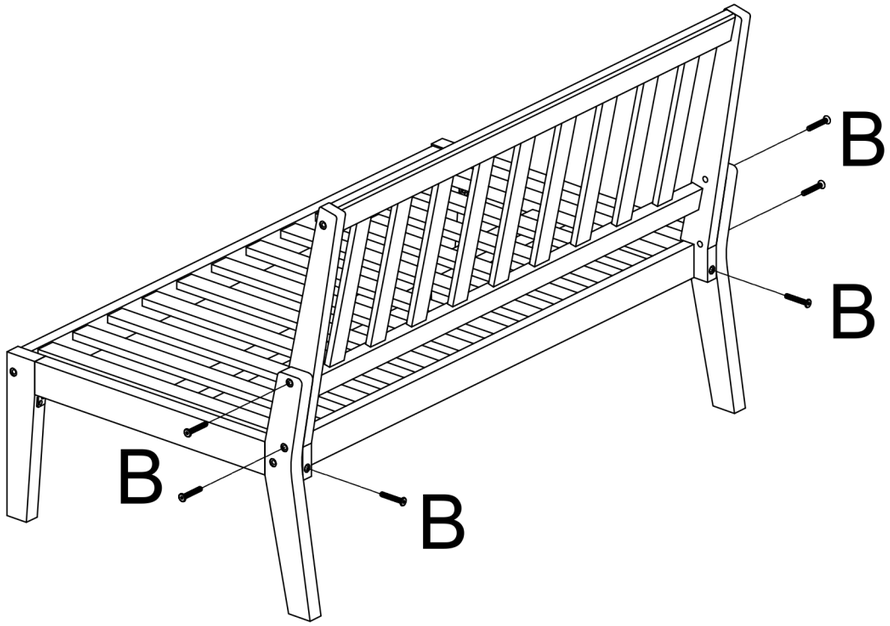
Step 2