ASSEMBLY INSTRUCTION

No.	Hardware	Q'ty
A	7x90x15	12 Pcs
B	M8x50x15	9 Pcs
C	M8x60x15	2 Pcs
		2 Pcs

Step 1

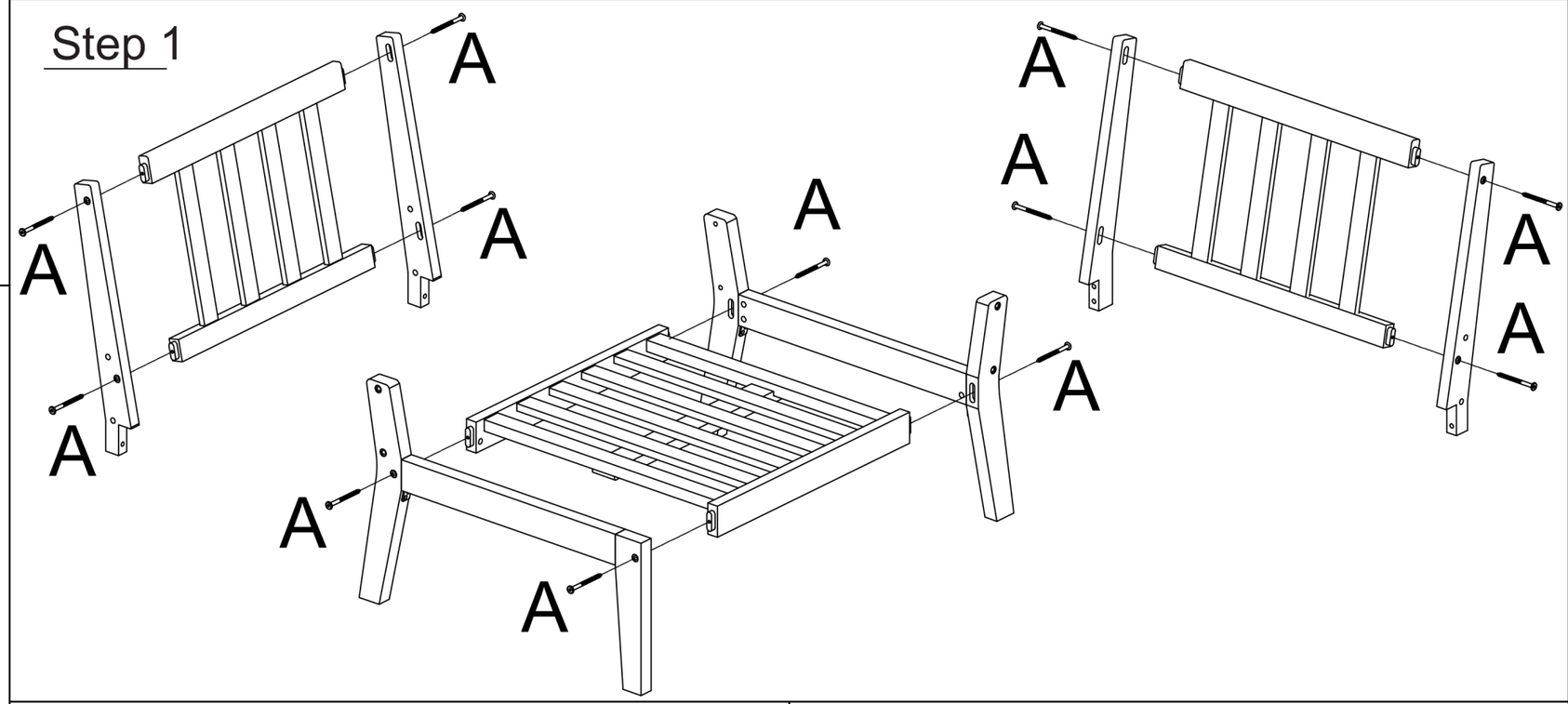

Step 2

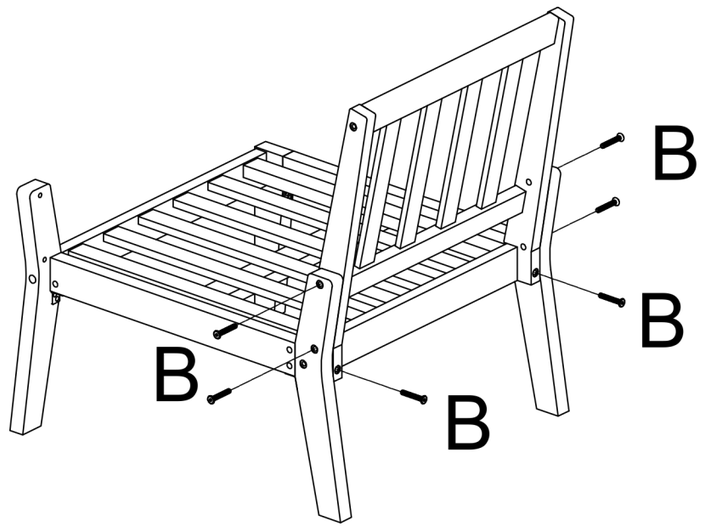
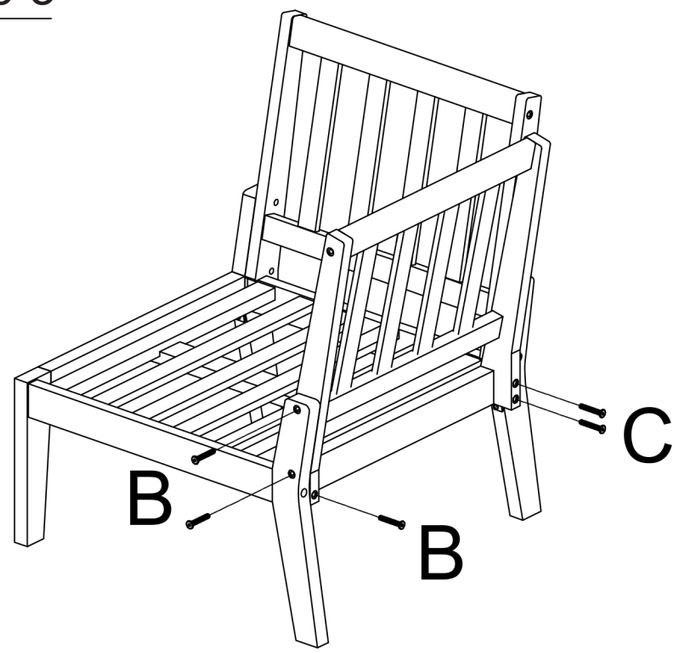
Step 3