ASSEMBLY INSTRUCTION

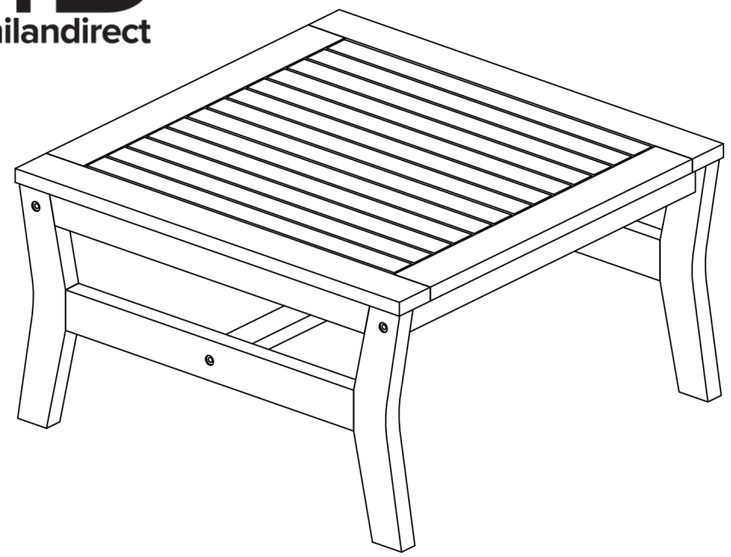
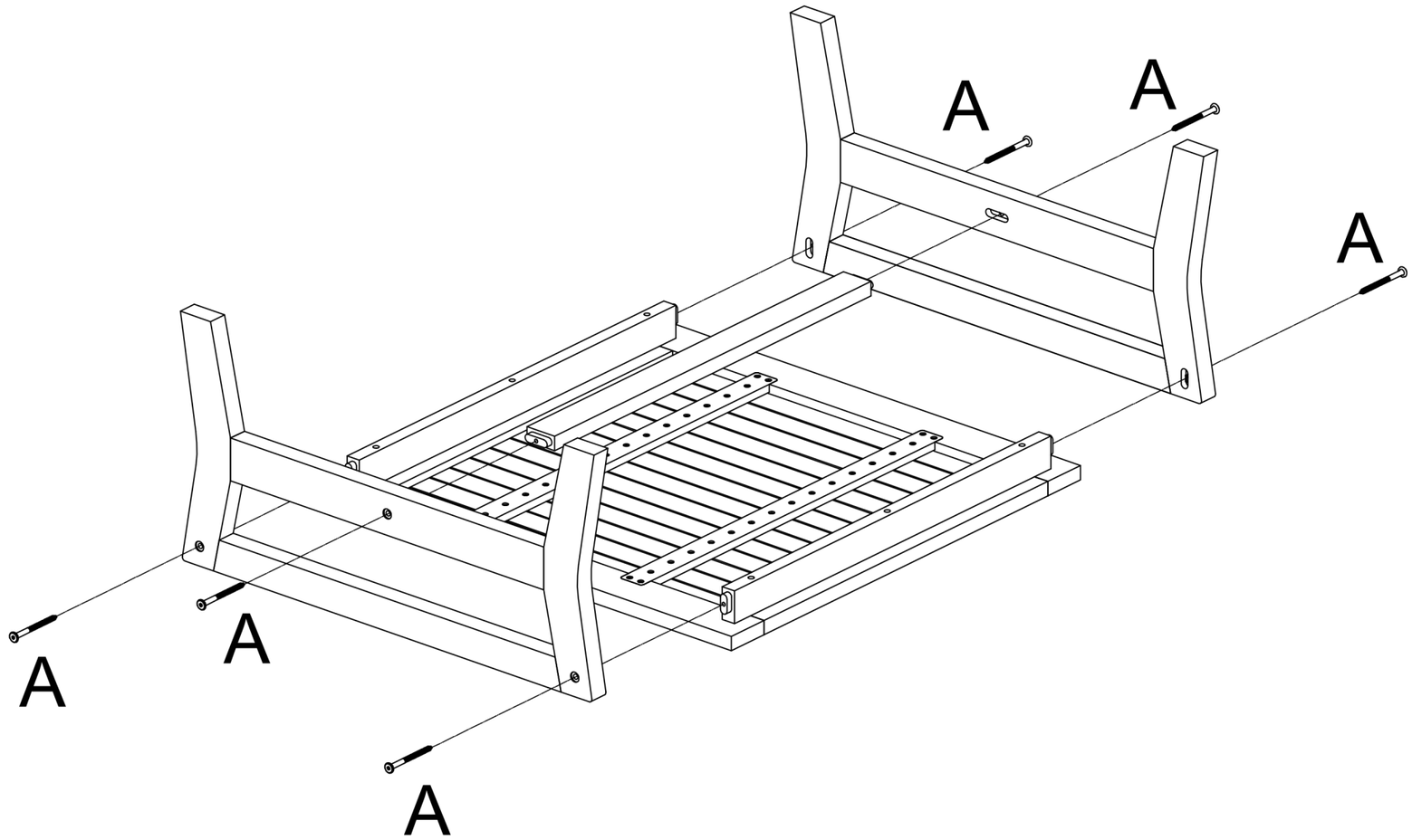
No.	Hardware	Q’ty
A	7x70x15	6 Pcs
		2 Pcs