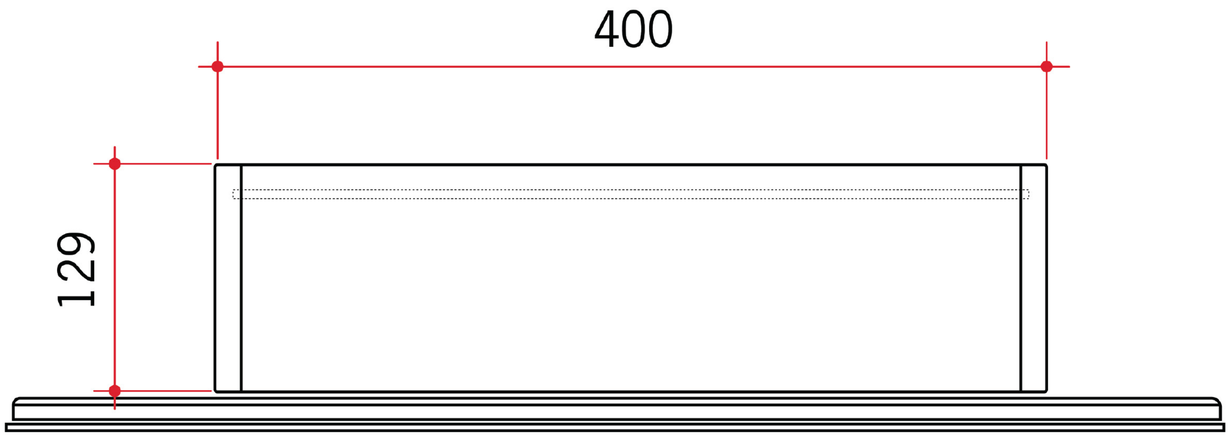

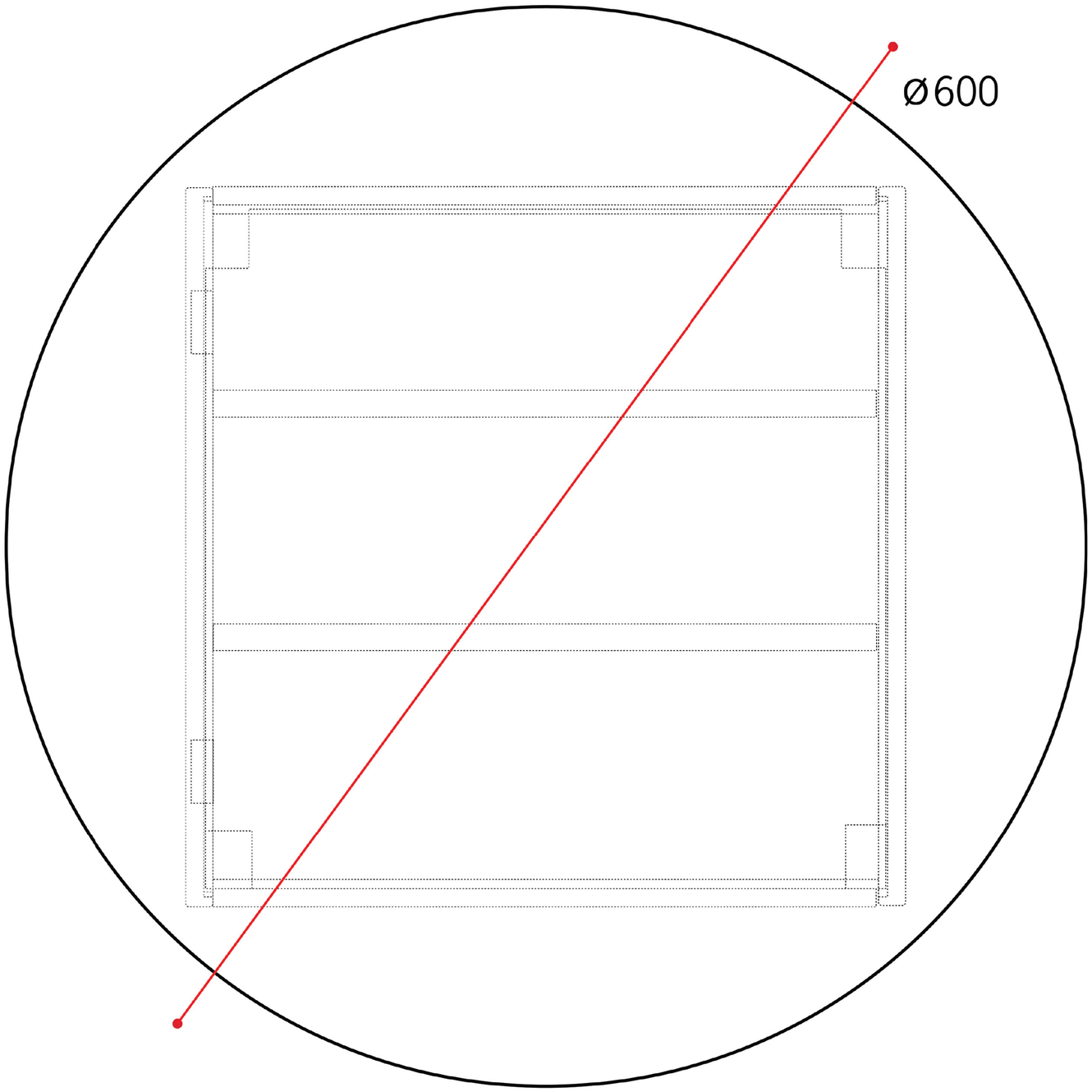

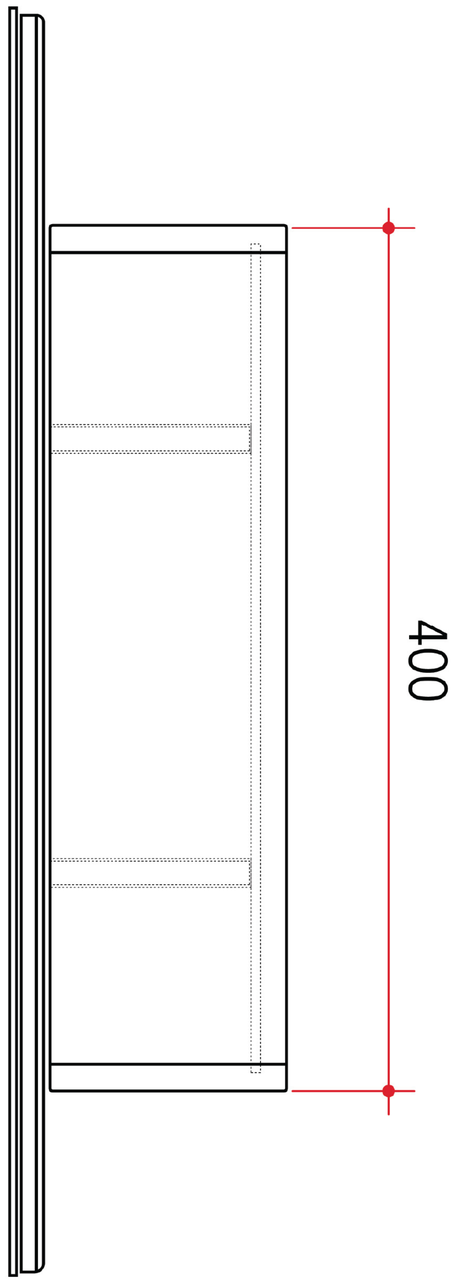

Note: All dimensions are in millimeters (mm)