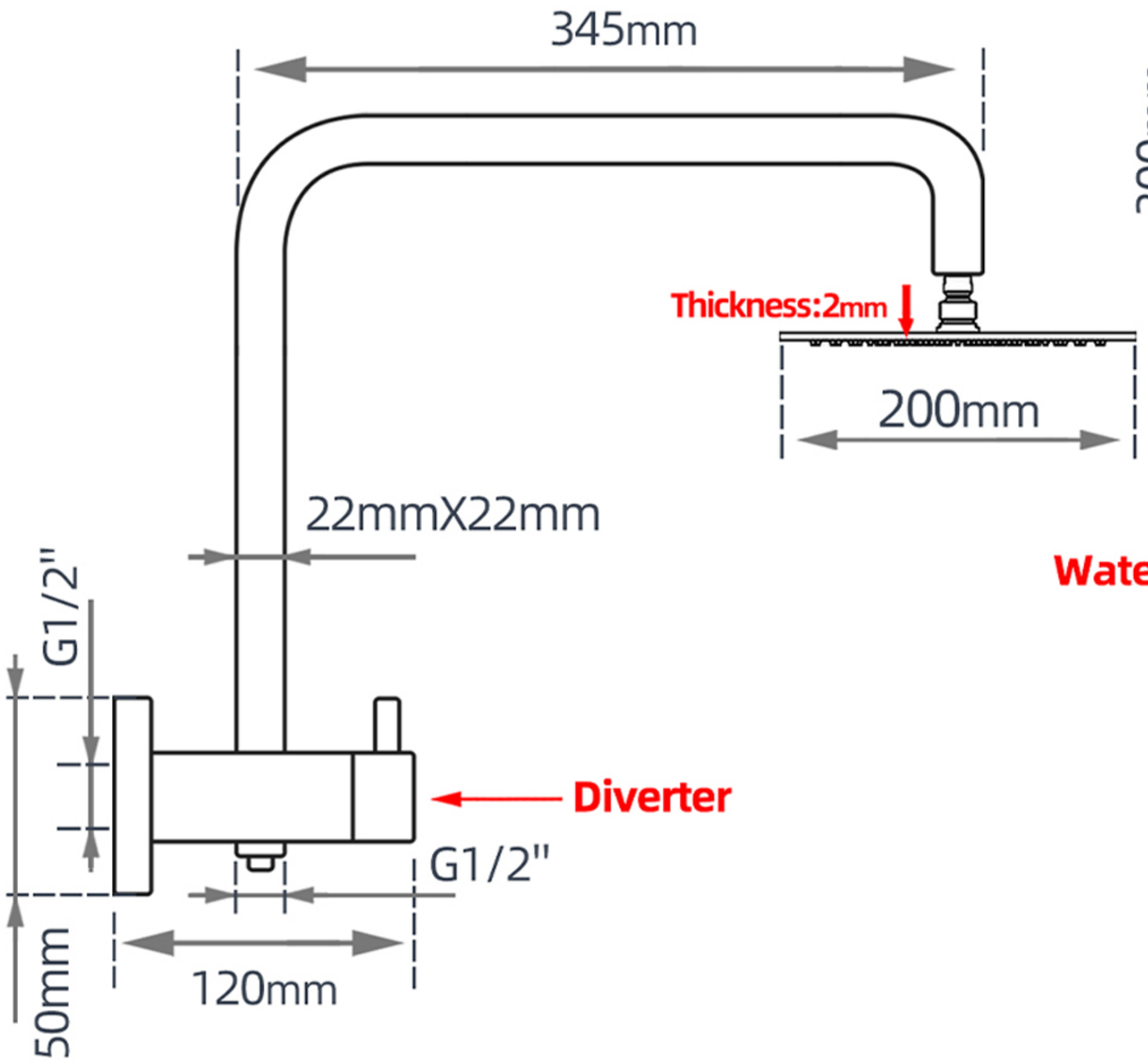
345mm
Thickness:2mm
200mm
22mmX22mm
G1/2"
Diverter
G1/2"
120mm
50mm

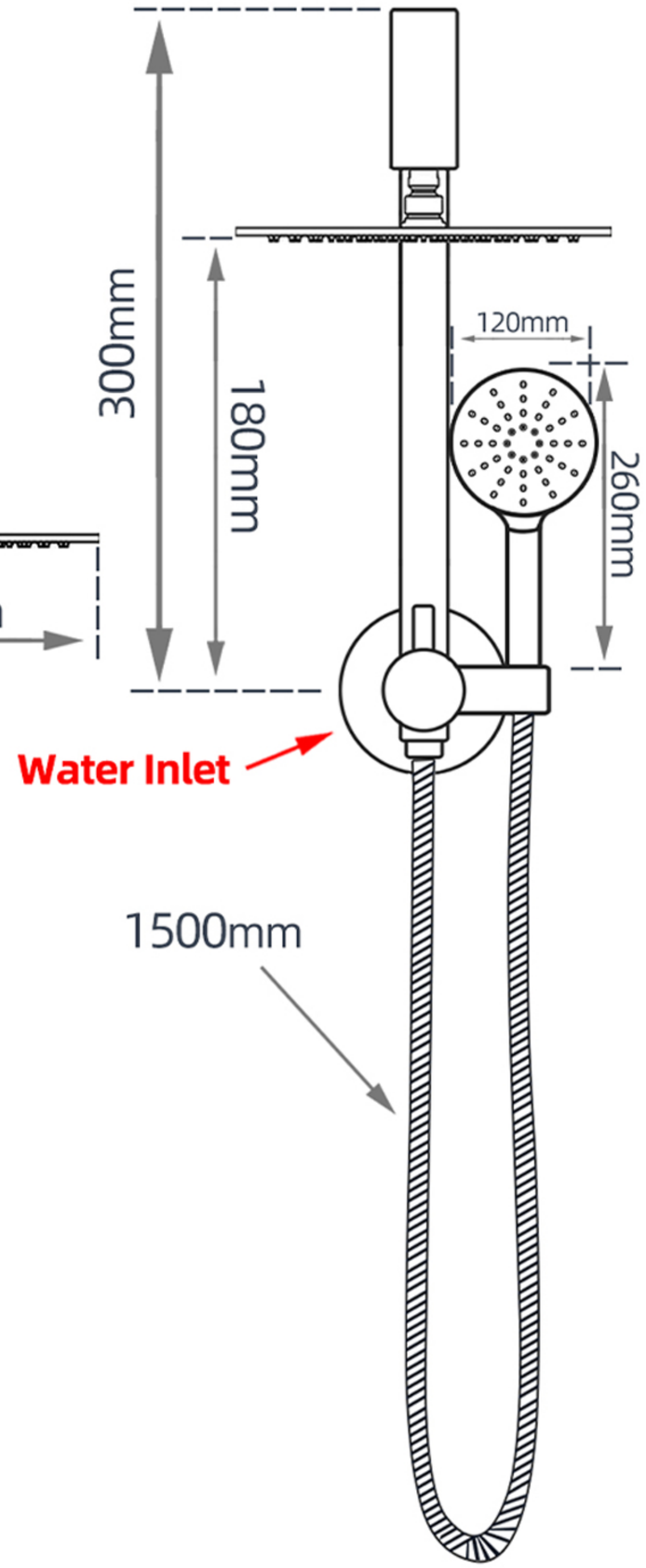
300mm
180mm
120mm
260mm
Water Inlet
1500mm

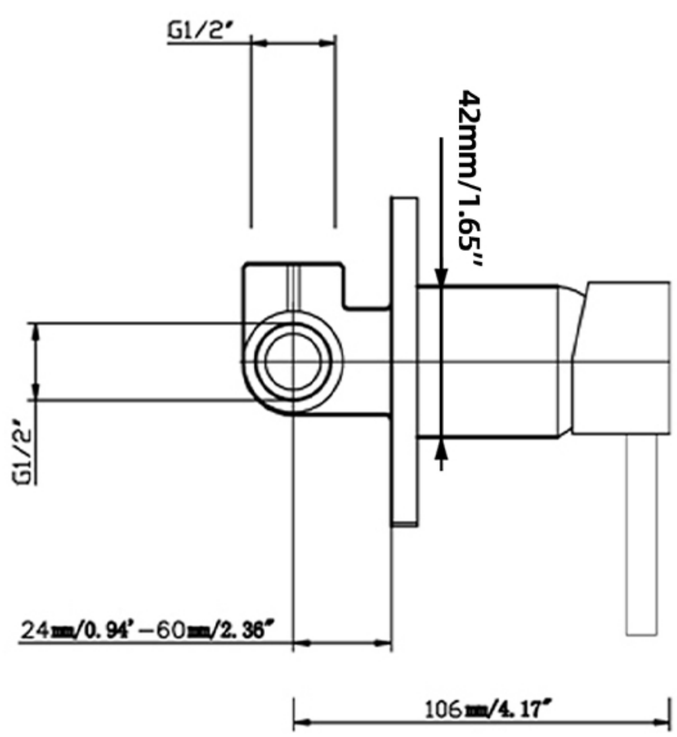
G1/2"
42mm/1.65"
G1/2"
24mm/0.94"-60mm/2.36"
106mm/4.17"

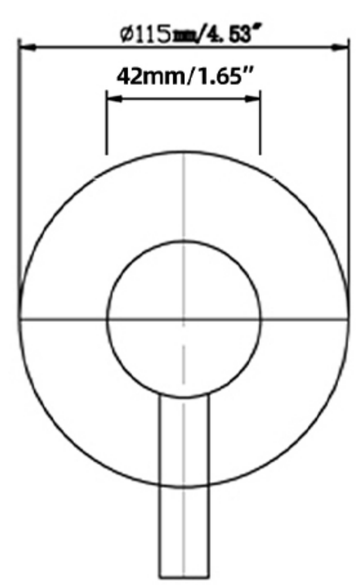
Ø115mm/4.53"
42mm/1.65"