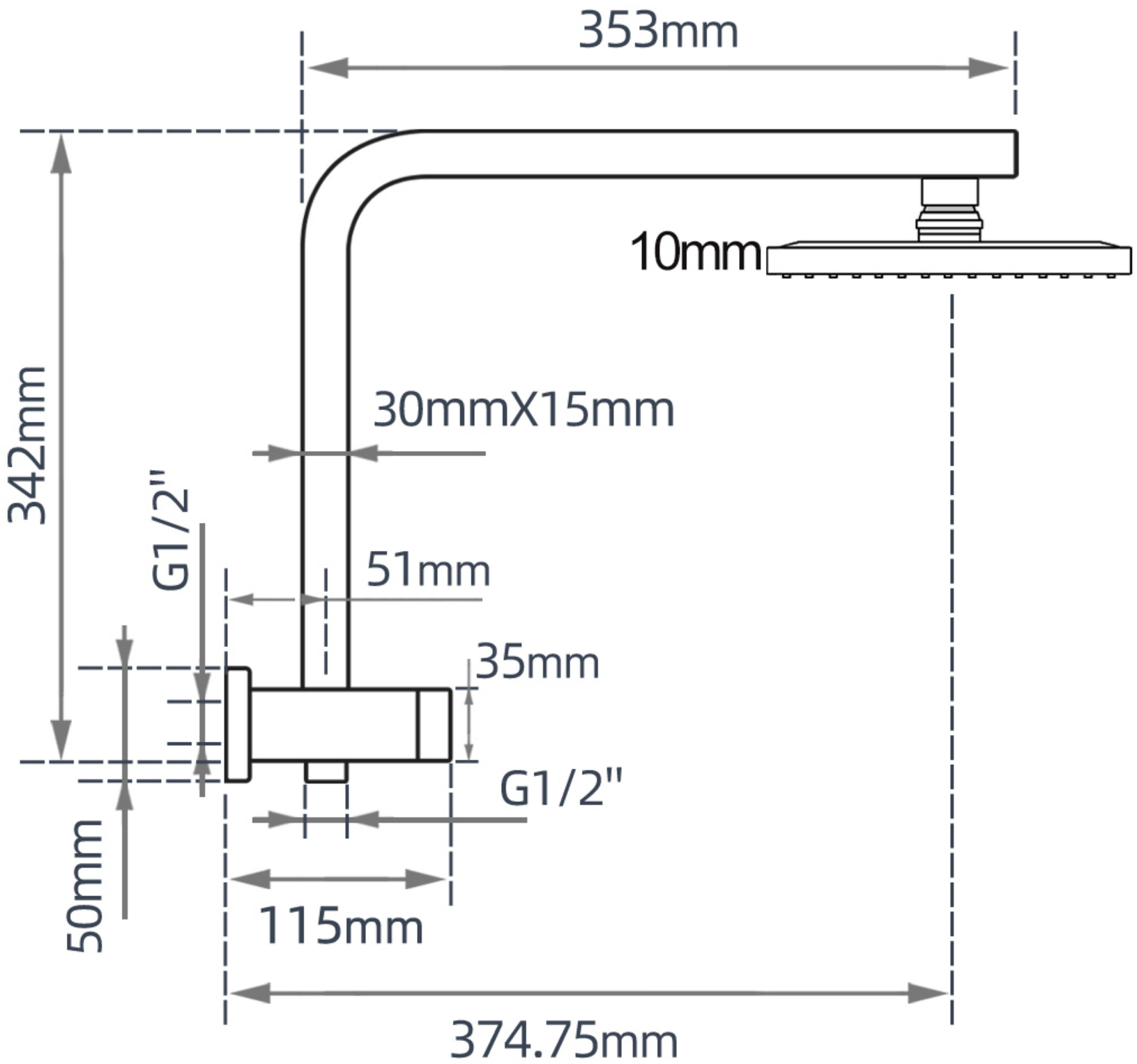
353mm
10mm
342mm
30mmX15mm
G1/2"
51mm
35mm
G1/2"
50mm
115mm
374.75mm

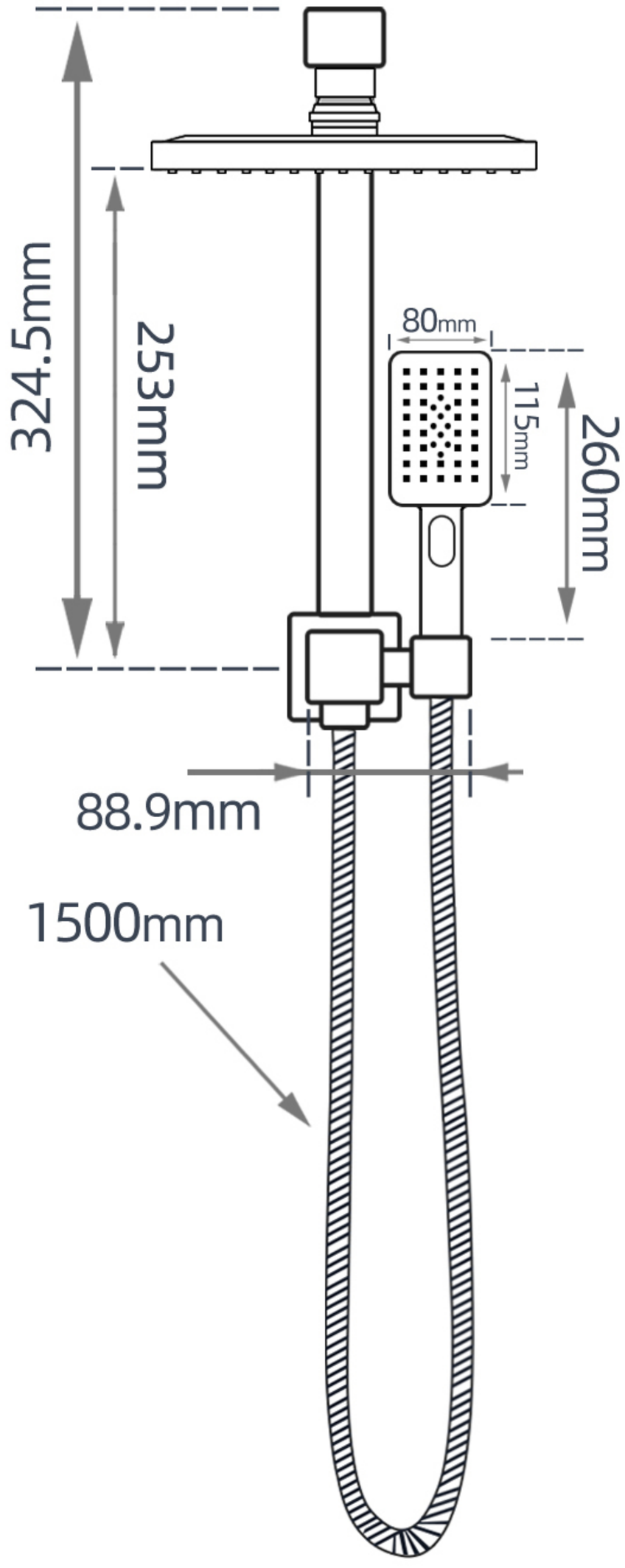
324.5mm
253mm
80mm
115mm
260mm
88.9mm
1500mm

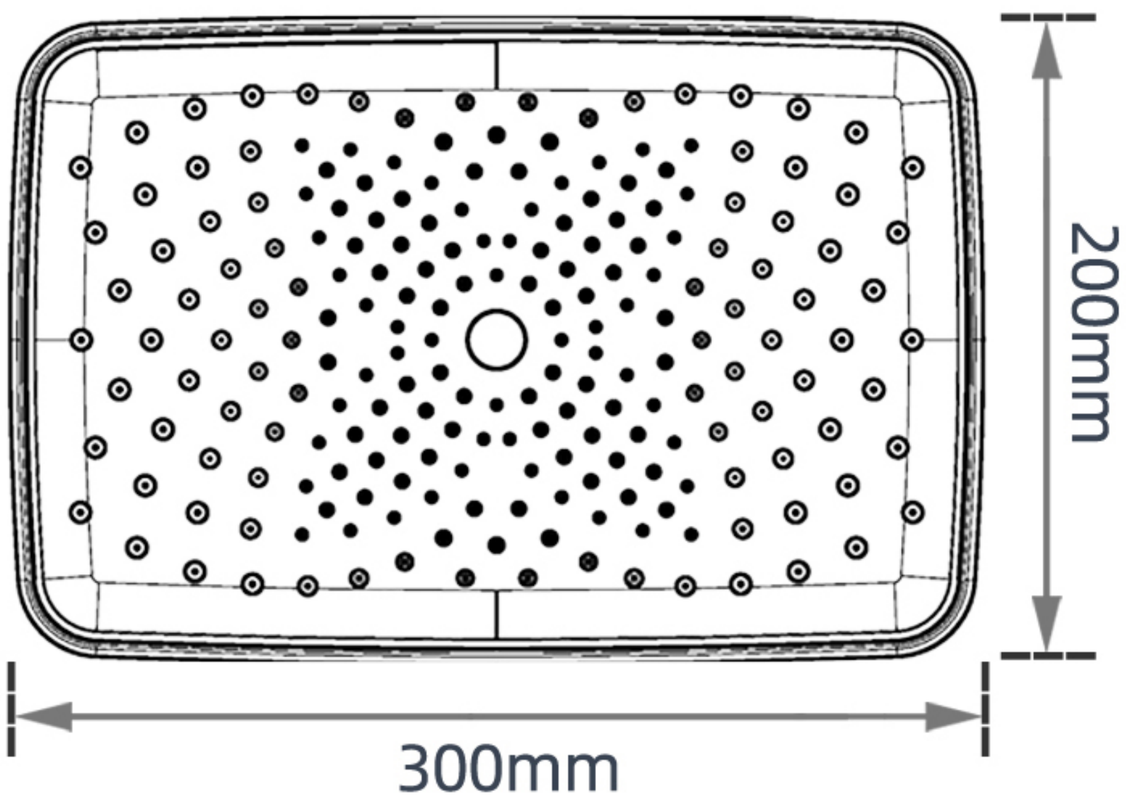
200mm
300mm