ASSEMBLY INSTRUCTIONS

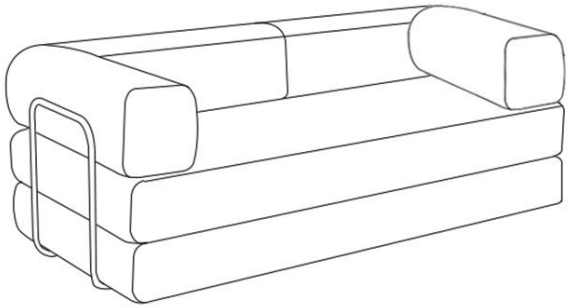

Return & Warranty policy:
--We strive to offer the highest quality products,and we also try our best to satisfy each and every customer that orders from us with replacement parts/or service as needed.
--If the item is damaged or defective, please take photos as evidence for replacements and refunds.

TIPS :

1. The sectional sofa comes in 1 separate boxes.
2. Due to differences of light effects, the actual color of the materials might be slightly different from the pictures.
3. No Assembly Required.This sofa can free of your stereotyped nightmare of furniture assembly.
4. Due to package compression for better shipment, the fabric may have wrinkles.
5. Please take all packages out and pat every part to make it rebound better and fluffy, so that it can restore to picture-like status.
6. Please keep children away from the plastic bags.

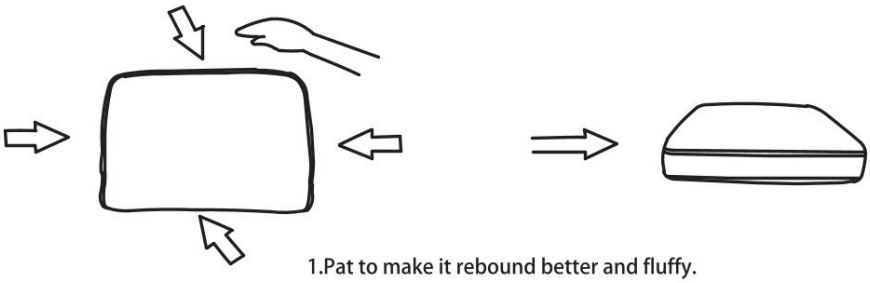

1.Pat to make it rebound better and fluffy.

2.Knead your cushion like giving your cushion a massage while allowing the air to flow through the foam.

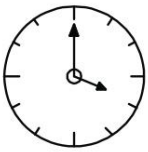

72h

It might takes up to 72 hours.

72h

PART LIST:

NO	DESCRIPON	SKETCH	QTY
A	SEAT CUSHION		2PCS
B	LEFT BACK CUSHION	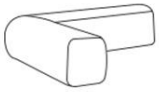	1PC
C	RIGHT BACK CUSHION	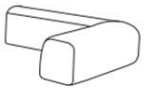	1PC
D	IRON BACKREST		3PCS

DIAGRAM 1

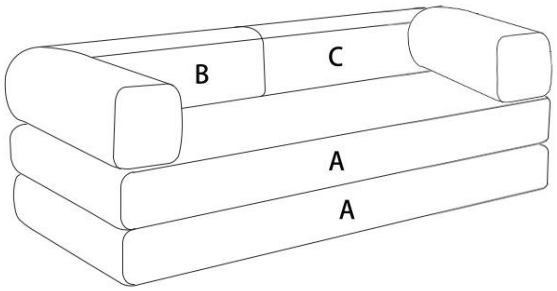

DIAGRAM 2

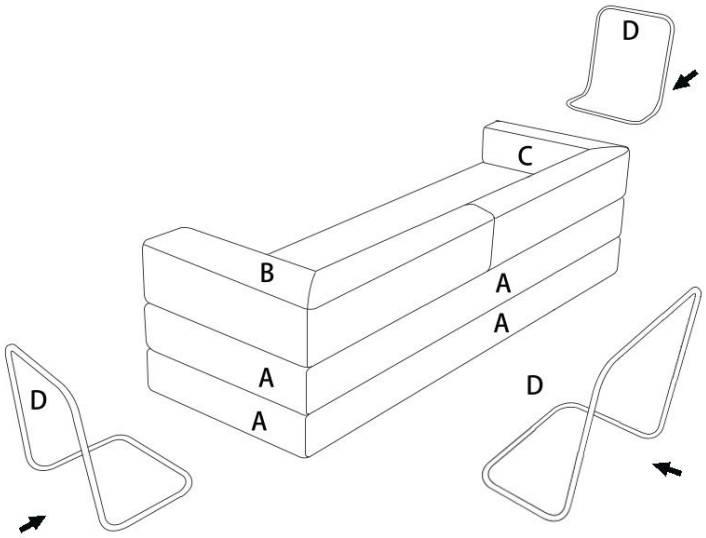

DIAGRAM 3

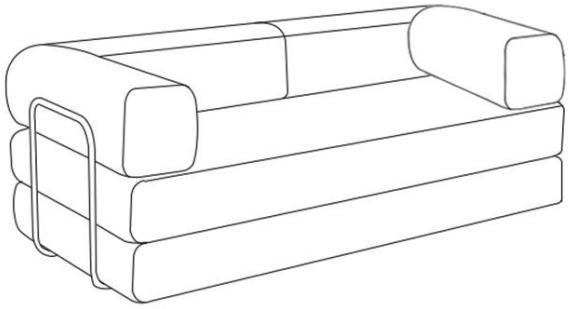

DIAGRAM 4

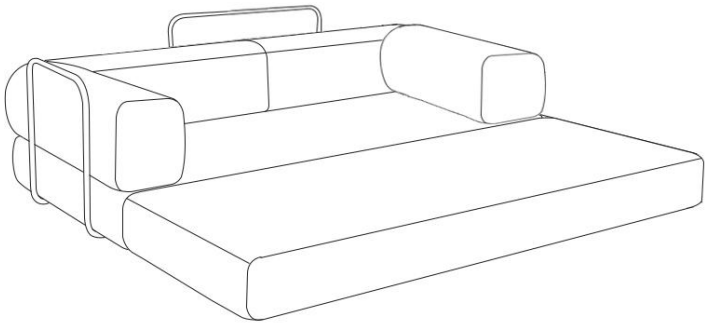

DIAGRAM 5

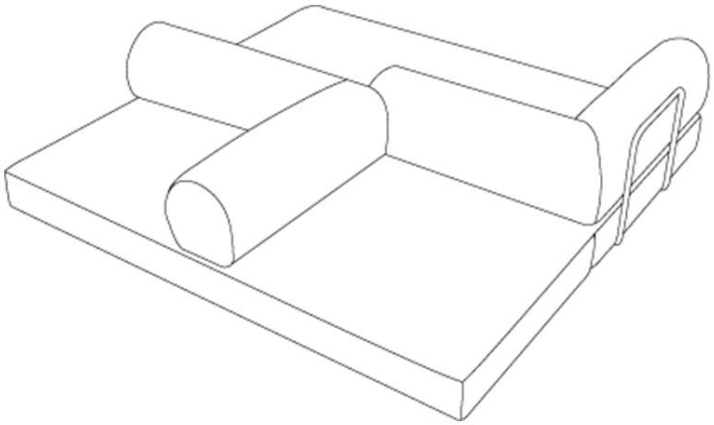
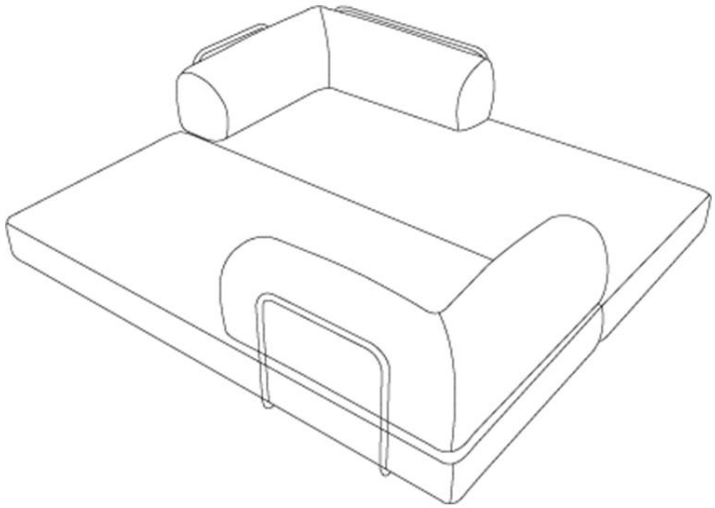
DIAGRAM 6