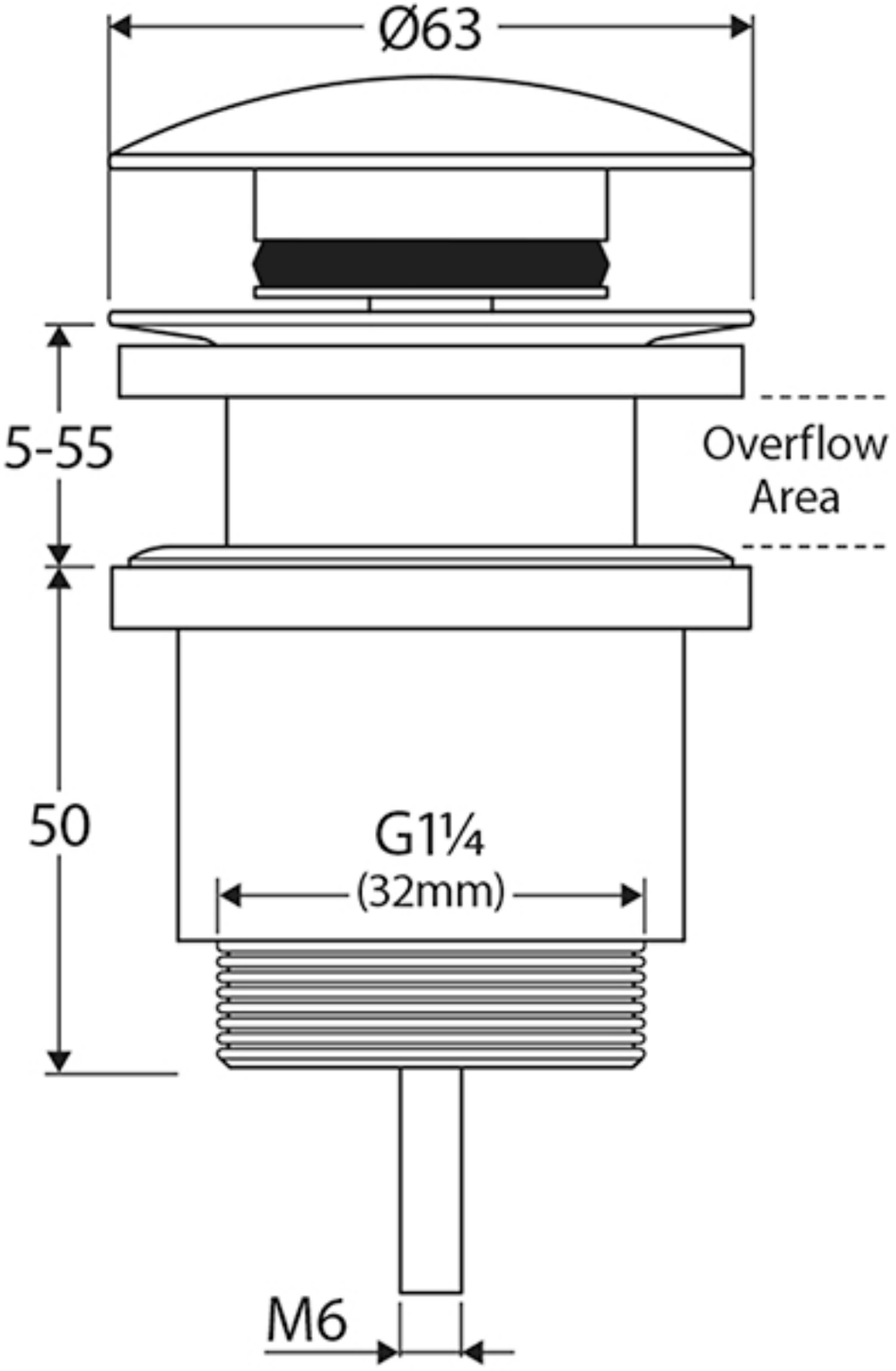

PULL-OUT SECTION

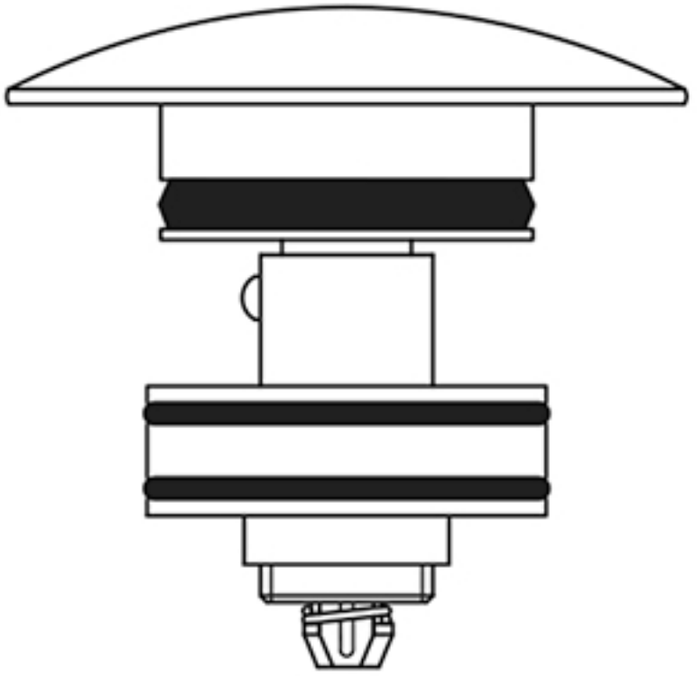
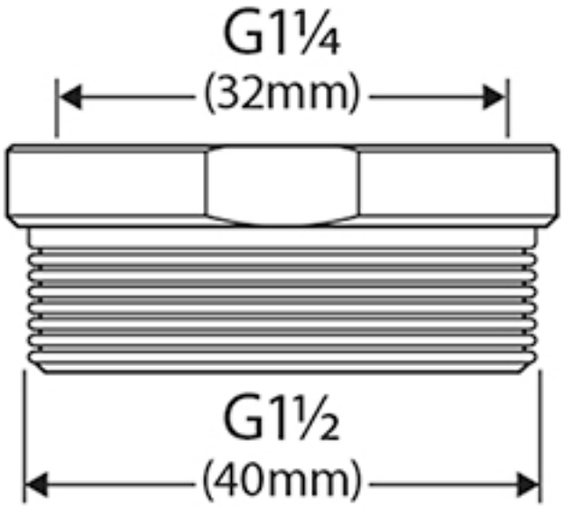
40MM ADAPTOR