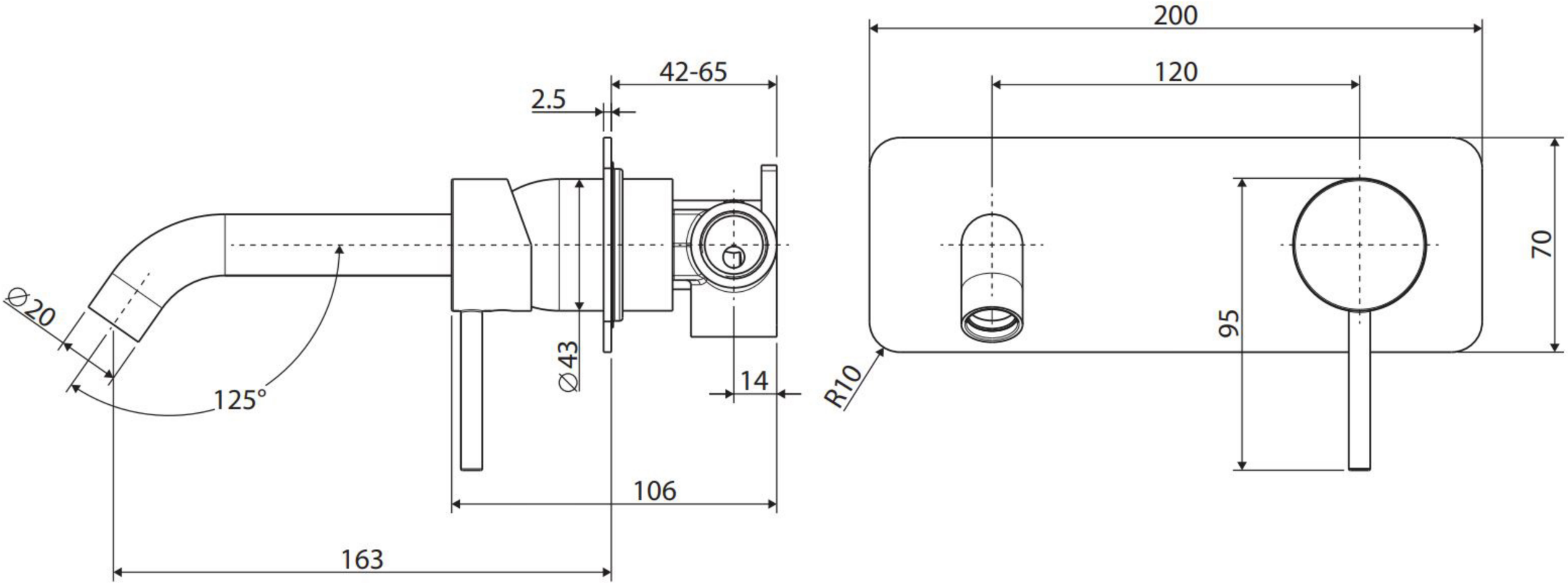
200
120
42-65
2.5
70
95
R10
Ø20
125°
Ø43
14
106
163